XEFT-04HS-ETDV/0.D04 4 460X330 TOUCH CONTROL ARIANNA OVEN

Assembly code	Assembly revision	Assembly image
ASM3420A/0.D00	Door	
ASM3408A/0.D02	External cover	
ASM3402A/0.D01	Cooking chamber	
ASM3438A/0.D01	Electrical system	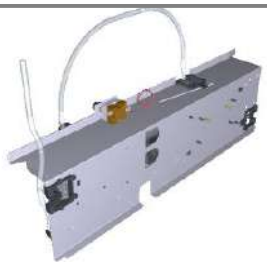

ASM3420A/0.D00 - Door

FRONT



ASM3420A/0.D00 - Door

REAR

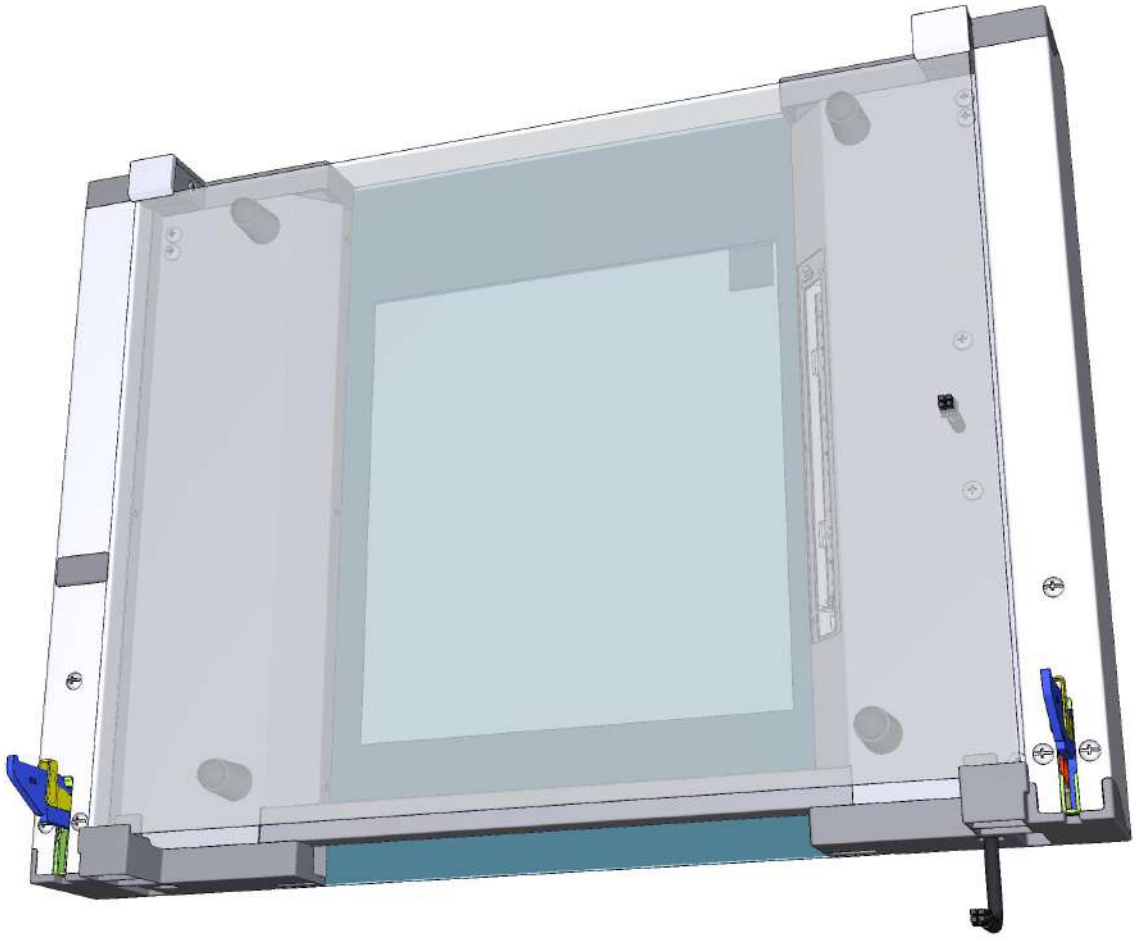

COMPONENT			SPARE PART		
Code	*Description*	*Image*	*Code*	*Description*	*Components list*
CE1285A	EMI ROUND FERRITE MOD.2643801502		CE1285A0	EMI ROUND FERRITE MOD.2643801502	
0B1290A			0B1290A0		
0B1292A			0B1292A0		
LP1050A	BL SHOP.PRO L180 COMPLETE LED BA		KLP1050A	BAKERLUX SHOP.PRO L180 LED BAR KIT	

Code	Description	Qty	UOM
IP1385A1	CORNER POLYSTYRENE PACKING 110X80X2000	0.300	M
LP1050A0	BL SHOP.PRO L180 COMPLETE LED BAR	1	PZ
VI1014A0	STAINLESS STEEL WASHER 4.5X9X0.8	1	PZ
VI1220A1	4,2X12 TCB SELF-TAPPING SCREW	1	PZ
VM1059A1	HEAT SHRINK FILM H800	0.300	M

COMPONENT			SPARE PART		
Code	*Description*	*Image*	*Code*	*Description*	*Components list*
VM2471A	BL SP LOWER CLAMP INT LOCK GLASS SLIDER	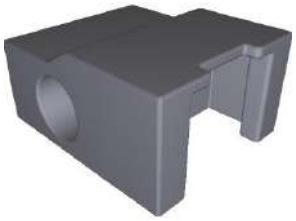	KVM2471A	BL SP INTERNAL GLASS LOCK HOLDER KIT	Code / Description / Qty / UOM VM2471A0 BL SP LOWER CLAMP INT LOCK GLASS SLIDER 1 PZ VM2471A0 BL SP LOWER CLAMP INT LOCK GLASS SLIDER 1 PZ VM2472A0 BL SP UPPER CLAMP INT LOCK GLASS SLIDER 1 PZ VM2472A0 BL SP UPPER CLAMP INT LOCK GLASS SLIDER 1 PZ
VM2503A	SLIDE TO FIX INTERNAL NON REMOV GLASS SP		KVM2503A	BL SP INT FIXED GLASS LOCK 2 PCS KIT	Code / Description / Qty / UOM VM2503A0 SLIDE TO FIX INTERNAL NON REMOV GLASS SP 2 PZ VM2503A0 SLIDE TO FIX INTERNAL NON REMOV GLASS SP 2 PZ
VM2464A	SHOP.PRO LEFT UPPER CAP DROP DOWN DOOR		KVM2464A	BL SP LEFT UPPER DROPDOWN DOOR CAP KIT	Code / Description / Qty / UOM VM2464A0 SHOP.PRO LEFT UPPER CAP DROP DOWN DOOR 1 PZ VM2464A0 SHOP.PRO LEFT UPPER CAP DROP DOWN DOOR 1 PZ
VM2472A	BL SP UPPER CLAMP INT LOCK GLASS SLIDER		KVM2471A	BL SP INTERNAL GLASS LOCK HOLDER KIT	Code / Description / Qty / UOM VM2471A0 BL SP LOWER CLAMP INT LOCK GLASS SLIDER 1 PZ VM2471A0 BL SP LOWER CLAMP INT LOCK GLASS SLIDER 1 PZ VM2472A0 BL SP UPPER CLAMP INT LOCK GLASS SLIDER 1 PZ VM2472A0 BL SP UPPER CLAMP INT LOCK GLASS SLIDER 1 PZ

COMPONENT			SPARE PART		
Code	*Description*	*Image*	*Code*	*Description*	*Components list*
VM2503A	SLIDE TO FIX INTERNAL NON REMOV GLASS SP		KVM2503A	BL SP INT FIXED GLASS LOCK 2 PCS KIT	Code / Description / Qty / UOM VM2503A0 SLIDE TO FIX INTERNAL NON REMOV GLASS SP 2 PZ VM2503A0 SLIDE TO FIX INTERNAL NON REMOV GLASS SP 2 PZ
VM2463A	SHOP.PRO RIGHT UPPER CAP DROP DOWN DOOR		KVM2463A	BL SP RIGHT UPPER DROPDOWN DOOR CAP KIT	Code / Description / Qty / UOM VM2463A0 SHOP.PRO RIGHT UPPER CAP DROP DOWN DOOR 1 PZ VM2463A0 SHOP.PRO RIGHT UPPER CAP DROP DOWN DOOR 1 PZ
VM2461A	BL SP RIGHT LOWER DROPDOWN DOOR CAP KIT	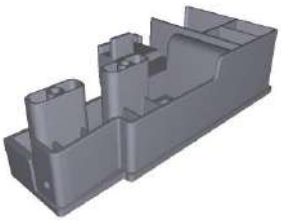	KVM2461A	BL SP RIGHT LOWER DROPDOWN DOOR CAP KIT	Code / Description / Qty / UOM VM2461A0 BL SP RIGHT LOWER DROPDOWN DOOR CAP KIT 1 PZ VM2461A0 BL SP RIGHT LOWER DROPDOWN DOOR CAP KIT 1 PZ
VM2462A	BL SP LEFT LOWER DROPDOWN DOOR CAP	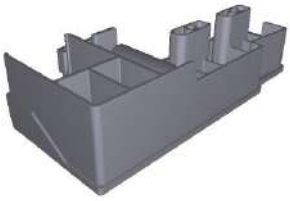	KVM2462A	BL SP LEFT LOWER DROPDOWN DOOR CAP KIT	Code / Description / Qty / UOM VM2462A0 BL SP LEFT LOWER DROPDOWN DOOR CAP 1 PZ VM2462A0 BL SP LEFT LOWER DROPDOWN DOOR CAP 1 PZ
VM2478A	BL SP GLASS H4 PUSHING BRACKET		KVM2478A	BL SHOP.PRO H4 GLASS SUPPORT 4 PCS KIT	Code / Description / Qty / UOM VM1630A0 INTERNAL GLASS PUSHING CAP 4 PZ VM2478A0 BL SP GLASS H4 PUSHING BRACKET 4 PZ VM2478A0 BL SP GLASS H4 PUSHING BRACKET 4 PZ

COMPONENT			SPARE PART		
Code	*Description*	*Image*	*Code*	*Description*	*Components list*
VM1630A			KVM1630A	CAP FOR INTERNAL GLASS 10 PCS KIT	Code: VM1630A0 — Description: INTERNAL GLASS PUSHING CAP — Qty: 10 — UOM: PZ
CE1095A	4 POLES MICROFIT 2 M BUS CABLE		KCE1095A	4POLES 2M BUS CABLE KIT POWER-CONTROL	Code: CE1095A0 — Description: 4 POLES MICROFIT 2 M BUS CABLE — Qty: 1 — UOM: PZ
CR1112A			KCR1112A	BAKERLUX SP ARIANNA-ELENA HINGES KIT	Code: CR1112A0 — Description: — Qty: 1 — UOM: PZ Code: VI1875A0 — Description: SCREW M5X10 TC1/2T INOX — Qty: 3 — UOM: PZ
VM2512A	BL SP DOOR-MICROSWITCH SOFT CLOSING		KVM2512A	BL SP DOOR-MICROSWITCH SOFT CLOSING KI	Code: VM2512A0 — Description: BL SP DOOR-MICRO SWITCH SOFT CLOSING — Qty: 1 — UOM: PZ Code: VM2512A0 — Description: BL SP DOOR-MICRO SWITCH SOFT CLOSING — Qty: 1 — UOM: PZ
VT1324A			KVT1324A	BL SHOP.PRO ARIANNA EXTERNAL GLASS KIT	Code: 0B0387A0 — Description: — Qty: 2 — UOM: PZ Code: ED1240A0 — Description: TECHNICAL DATA LABEL — Qty: 1 — UOM: PZ Code: IP1385A1 — Description: CORNER POLYSTYRENE PACKING 110X80X2000 — Qty: 1 — UOM: M Code: IP1508A1 — Description: POLYSTYRENE U SHAPED PROFILE 2000X60X60 — Qty: 1 — UOM: M Code: SL1155A1 — Description: LOCTITE BICOMPONENT SILICON — Qty: 18 — UOM: ML

COMPONENT			SPARE PART		
Code	*Description*	*Image*	*Code*	*Description*	*Components list*
VT1324A			KVT1324A	BL SHOP.PRO ARIANNA EXTERNAL GLASS KIT	

Code	Description	Qty	UOM
VI1220A1	4,2X12 TCB SELF-TAPPING SCREW	6	PZ
VM1059A1	HEAT SHRINK FILM H800	1.400	M
VT1324A0		1	PZ
VT1324A0		1	PZ

Code	Description	Qty	UOM
KDR1287A	BL SHOP.PRO ARIANNA EXTER DOOR KIT LEFT		
0B1297A0		1	PZ
0B1298A0		1	PZ
0B1299B0		1	PZ
0B1300A0		1	PZ
CR1040A0	DOOR LATCH FOR EL.MECH. LOCKING SYSTEM	1	PZ
ED1240A0	TECHNICAL DATA LABEL	1	PZ
IP1325B0	POLYSTYRENE CORNER PACKING D20	0.800	PZ
IP1385A1	CORNER POLYSTYRENE PACKING 110X80X2000	0.500	M
IP1508A1	POLYSTYRENE U SHAPED PROFILE 2000X60X60	0.800	M
ML1005A0		2	PZ
SL1155A1	LOCTITE BICOMPONENT SILICON	18	ML
TB1562A0	DOOR LATERAL BEAM SP600	2	PZ
TB3304A0		1	PZ
VI1036A0	ST STEEL STRIPED THREAD INSERT M10 FTT/C	1	PZ
VI1220A1	4,2X12 TCB SELF-TAPPING SCREW	14	PZ
VI1930A0	5X25 ST. STEEL SCREW CHIP	22	PZ
VM1059A1	HEAT SHRINK FILM H800	1.400	M
VM1209A0		1	PZ
VM1630A0	INTERNAL GLASS PUSHING CAP	4	PZ

COMPONENT			SPARE PART		
Code	*Description*	*Image*	*Code*	*Description*	*Components list*
VT1324A			KDR1287A	BL SHOP.PRO ARIANNA EXTER DOOR KIT LEFT	

Code	Description	Qty	UOM
VM2274A0	GROOVED BUSHING	1	PZ
VM2275A0	SMOOTH BUSHING	1	PZ
VM2456A0	BAKERLUX SHOP.PRO HANDLE END	2	PZ
VM2456A0	BAKERLUX SHOP.PRO HANDLE END	2	PZ
VM2465A0	SP SIDE-OPENIN G DOOR RIGHT LOWER CAP KIT	1	PZ
VM2465A0	SP SIDE-OPENIN G DOOR RIGHT LOWER CAP KIT	1	PZ
VM2466A0	BL SP LEFT LOWER LATERAL DOOR CAP	1	PZ
VM2466A0	BL SP LEFT LOWER LATERAL DOOR CAP	1	PZ
VM2467A0	SP SIDE-OPENIN G DOOR RIGHT UPPER CAP KIT	1	PZ
VM2467A0	SP SIDE-OPENIN G DOOR RIGHT UPPER CAP KIT	1	PZ
VM2468A0	BL SP LEFT UPPER LATERAL DOOR CAP	1	PZ
VM2468A0	BL SP LEFT UPPER LATERAL DOOR CAP	1	PZ
VM2470A0	SLIDE TO FIX INTERNAL GLASS SHOP.PRO	2	PZ
VM2470A0	SLIDE TO FIX INTERNAL GLASS SHOP.PRO	2	PZ

COMPONENT			SPARE PART		
Code	*Description*	*Image*	*Code*	*Description*	*Components list*
VT1324A			KDR1287A	BL SHOP.PRO ARIANNA EXTER DOOR KIT LEFT	

Code	Description	Qty	UOM
VM2471A0	BL SP LOWER CLAMP INT LOCK GLASS SLIDER	1	PZ
VM2471A0	BL SP LOWER CLAMP INT LOCK GLASS SLIDER	1	PZ
VM2472A0	BL SP UPPER CLAMP INT LOCK GLASS SLIDER	1	PZ
VM2472A0	BL SP UPPER CLAMP INT LOCK GLASS SLIDER	1	PZ
VM2473A0	BL SP INT GLASS HINGE LOWER LOCK PIN	1	PZ
VM2473A0	BL SP INT GLASS HINGE LOWER LOCK PIN	1	PZ
VM2474A0	BL SP INT GLASS HINGE UPPER LOCK PIN	1	PZ
VM2474A0	BL SP INT GLASS HINGE UPPER LOCK PIN	1	PZ
VM2478A0	BL SP GLASS H4 PUSHING BRACKET	4	PZ
VM2478A0	BL SP GLASS H4 PUSHING BRACKET	4	PZ
VM2489A0	SP HANDLE END KIT + STYLUS KIT	1	PZ
VM2504A0	DOWEL TO GUIDE SLIDE SPRING SHOP.PRO	2	PZ
VM2504A0	DOWEL TO GUIDE SLIDE SPRING SHOP.PRO	2	PZ
VM2527A0	STYLUS PEN FOR SP	1	PZ
VT1324A0		1	PZ
VT1324A0		1	PZ

COMPONENT			SPARE PART		
Code	*Description*	*Image*	*Code*	*Description*	*Components list*
VT1324A			KDR1286A	BL SHOP.PRO ARIANNA EXTERNAL DOOR KI	

Code	Description	Qty	UOM
0B1297A0		1	PZ
0B1298A0		1	PZ
0B1299B0		1	PZ
0B1300A0		1	PZ
CR1040A0	DOOR LATCH FOR EL.MECH. LOCKING SYSTEM	1	PZ
ED1240A0	TECHNICAL DATA LABEL	1	PZ
IP1325B0	POLYSTYRENE CORNER PACKING D20	0.800	PZ
IP1385A1	CORNER POLYSTYRENE PACKING 110X80X2000	0.500	M
IP1508A1	POLYSTYRENE U SHAPED PROFILE 2000X60X60	0.800	M
ML1005A0		2	PZ
SL1155A1	LOCTITE BICOMPONENT SILICON	18	ML
TB1562A0	DOOR LATERAL BEAM SP600	2	PZ
TB3304A0		1	PZ
VI1036A0	ST STEEL STRIPED THREAD INSERT M10 FTT/C	1	PZ
VI1220A1	4,2X12 TCB SELF-TAPPING SCREW	14	PZ
VI1930A0	5X25 ST. STEEL SCREW CHIP	22	PZ
VM1059A1	HEAT SHRINK FILM H800	1.400	M
VM1209A0		1	PZ
VM1630A0	INTERNAL GLASS PUSHING CAP	4	PZ
VM2274A0	GROOVED BUSHING	1	PZ
VM2275A0	SMOOTH BUSHING	1	PZ
VM2456A0	BAKERLUX SHOP.PRO HANDLE END	2	PZ

COMPONENT			SPARE PART		
Code	*Description*	*Image*	*Code*	*Description*	*Components list*
VT1324A			KDR1286A	BL SHOP.PRO ARIANNA EXTERNAL DOOR KI	

Code	Description	Qty	UOM
VM2456A0	BAKERLUX SHOP.PRO HANDLE END	2	PZ
VM2465A0	SP SIDE-OPENIN G DOOR RIGHT LOWER CAP KIT	1	PZ
VM2465A0	SP SIDE-OPENIN G DOOR RIGHT LOWER CAP KIT	1	PZ
VM2466A0	BL SP LEFT LOWER LATERAL DOOR CAP	1	PZ
VM2466A0	BL SP LEFT LOWER LATERAL DOOR CAP	1	PZ
VM2467A0	SP SIDE-OPENIN G DOOR RIGHT UPPER CAP KIT	1	PZ
VM2467A0	SP SIDE-OPENIN G DOOR RIGHT UPPER CAP KIT	1	PZ
VM2468A0	BL SP LEFT UPPER LATERAL DOOR CAP	1	PZ
VM2468A0	BL SP LEFT UPPER LATERAL DOOR CAP	1	PZ
VM2470A0	SLIDE TO FIX INTERNAL GLASS SHOP.PRO	2	PZ
VM2470A0	SLIDE TO FIX INTERNAL GLASS SHOP.PRO	2	PZ
VM2471A0	BL SP LOWER CLAMP INT LOCK GLASS SLIDER	1	PZ
VM2471A0	BL SP LOWER CLAMP INT LOCK GLASS SLIDER	1	PZ

COMPONENT			SPARE PART		
Code	*Description*	*Image*	*Code*	*Description*	*Components list*
VT1324A			KDR1286A	BL SHOP.PRO ARIANNA EXTERNAL DOOR KI	

Code	Description	Qty	UOM
VM2472A0	BL SP UPPER CLAMP INT LOCK GLASS SLIDER	1	PZ
VM2472A0	BL SP UPPER CLAMP INT LOCK GLASS SLIDER	1	PZ
VM2473A0	BL SP INT GLASS HINGE LOWER LOCK PIN	1	PZ
VM2473A0	BL SP INT GLASS HINGE LOWER LOCK PIN	1	PZ
VM2474A0	BL SP INT GLASS HINGE UPPER LOCK PIN	1	PZ
VM2474A0	BL SP INT GLASS HINGE UPPER LOCK PIN	1	PZ
VM2478A0	BL SP GLASS H4 PUSHING BRACKET	4	PZ
VM2478A0	BL SP GLASS H4 PUSHING BRACKET	4	PZ
VM2489A0	SP HANDLE END KIT + STYLUS KIT	1	PZ
VM2504A0	DOWEL TO GUIDE SLIDE SPRING SHOP.PRO	2	PZ
VM2504A0	DOWEL TO GUIDE SLIDE SPRING SHOP.PRO	2	PZ
VM2527A0	STYLUS PEN FOR SP	1	PZ
VT1324A0		1	PZ
VT1324A0		1	PZ

Code	Description	Qty	UOM
0B1289A0		1	PZ
0B1290A0		1	PZ
0B1291A0		1	PZ
0B1292A0		1	PZ
CR1112A0		2	PZ

KDR1281A	BL SHOP.PRO ARIANNA COMPLETE DOOR KIT	

COMPONENT			SPARE PART		
Code	*Description*	*Image*	*Code*	*Description*	*Components list*
VT1324A			KDR1281A	BL SHOP.PRO ARIANNA COMPLETE DOOR KIT	

Code	Description	Qty	UOM
IP1508A1	POLYSTYRENE U SHAPED PROFILE 2000X60X60	1.500	M
LP1050A0	BL SHOP.PRO L180 COMPLETE LED BAR	1	PZ
SL1155A1	LOCTITE BICOMPONENT SILICON	18	ML
TB1562A0	DOOR LATERAL BEAM SP600	1	PZ
TB3301A0		1	PZ
VI1014A0	STAINLESS STEEL WASHER 4.5X9X0.8	1	PZ
VI1220A1	4,2X12 TCB SELF-TAPPING SCREW	10	PZ
VI1875A0	SCREW M5X10 TC1/2T INOX	6	PZ
VI1930A0	5X25 ST. STEEL SCREW CHIP	12	PZ
VM1059A1	HEAT SHRINK FILM H800	0.500	M
VM1630A0	INTERNAL GLASS PUSHING CAP	1	PZ
VM2456A0	BAKERLUX SHOP.PRO HANDLE END	2	PZ
VM2456A0	BAKERLUX SHOP.PRO HANDLE END	2	PZ
VM2461A0	BL SP RIGHT LOWER DROPDOWN DOOR CAP KIT	1	PZ
VM2461A0	BL SP RIGHT LOWER DROPDOWN DOOR CAP KIT	1	PZ
VM2462A0	BL SP LEFT LOWER DROPDOWN DOOR CAP	1	PZ
VM2462A0	BL SP LEFT LOWER DROPDOWN DOOR CAP	1	PZ

COMPONENT			SPARE PART		
Code	*Description*	*Image*	*Code*	*Description*	*Components list*
VT1324A			KDR1281A	BL SHOP.PRO ARIANNA COMPLETE DOOR KIT	

Code	Description	Qty	UOM
VM2463A0	SHOP.PRO RIGHT UPPER CAP DROP DOWN DOOR	1	PZ
VM2463A0	SHOP.PRO RIGHT UPPER CAP DROP DOWN DOOR	1	PZ
VM2464A0	SHOP.PRO LEFT UPPER CAP DROP DOWN DOOR	1	PZ
VM2464A0	SHOP.PRO LEFT UPPER CAP DROP DOWN DOOR	1	PZ
VM2471A0	BL SP LOWER CLAMP INT LOCK GLASS SLIDER	1	PZ
VM2471A0	BL SP LOWER CLAMP INT LOCK GLASS SLIDER	1	PZ
VM2472A0	BL SP UPPER CLAMP INT LOCK GLASS SLIDER	1	PZ
VM2472A0	BL SP UPPER CLAMP INT LOCK GLASS SLIDER	1	PZ
VM2478A0	BL SP GLASS H4 PUSHING BRACKET	1	PZ
VM2478A0	BL SP GLASS H4 PUSHING BRACKET	1	PZ
VM2489A0	SP HANDLE END KIT + STYLUS KIT	1	PZ
VM2503A0	SLIDE TO FIX INTERNAL NON REMOV GLASS SP	2	PZ
VM2503A0	SLIDE TO FIX INTERNAL NON REMOV GLASS SP	2	PZ
VM2512A0	BL SP DOOR-MICRO SWITCH SOFT CLOSING	1	PZ

COMPONENT			SPARE PART		
Code	*Description*	*Image*	*Code*	*Description*	*Components list*
VT1324A			KDR1281A	BL SHOP.PRO ARIANNA COMPLETE DOOR KIT	Code / Description / Qty / UOM VM2512A0 BL SP DOOR-MICRO SWITCH SOFT CLOSING 1 PZ VM2527A0 STYLUS PEN FOR SP 1 PZ VT1324A0 1 PZ VT1324A0 1 PZ VT1330A0 1 PZ VT1330A0 1 PZ
VT1330A			KVT1330A	BL SP ARIANNA INTERNAL DOOR GLASS KIT	Code / Description / Qty / UOM IP1508A1 POLYSTYRENE U SHAPED PROFILE 2000X60X60 0.800 M VM1059A1 HEAT SHRINK FILM H800 1.200 M VT1330A0 1 PZ VT1330A0 1 PZ
TB3301A			KTB3301A	BL SP 460X330 DROPDOWN HANDLE TUBE KIT	Code / Description / Qty / UOM TB3301A0 1 PZ VI1930A0 5X25 ST. STEEL SCREW CHIP 4 PZ VM2456A0 BAKERLUX SHOP.PRO HANDLE END 2 PZ VM2456A0 BAKERLUX SHOP.PRO HANDLE END 2 PZ VM2489A0 SP HANDLE END KIT + STYLUS KIT 1 PZ VM2527A0 STYLUS PEN FOR SP 1 PZ
VM2456A	BAKERLUX SHOP.PRO HANDLE END		KVM2456A	2 PCS BAKERLUX SHOP.PRO HANDLE END KIT	Code / Description / Qty / UOM VI1930A0 5X25 ST. STEEL SCREW CHIP 4 PZ VM2456A0 BAKERLUX SHOP.PRO HANDLE END 2 PZ VM2456A0 BAKERLUX SHOP.PRO HANDLE END 2 PZ VM2489A0 SP HANDLE END KIT + STYLUS KIT 1 PZ VM2527A0 STYLUS PEN FOR SP 1 PZ

COMPONENT			SPARE PART		
Code	*Description*	*Image*	*Code*	*Description*	*Components list*
VM2527A	STYLUS PEN FOR S		KVM2527A	EVEREO-BLSP TOUCH STYLUS 5 PCS KIT	Code: VM2527A0 — Description: STYLUS PEN FOR SP — Qty: 5 — UOM: PZ
PE2109A	SP TOUCH COMPLETE CONTROL BOARD		KPE2109A	BL SHOP.PRO TOUCH CONTROL BOARD KIT	Code: PE2109A2 — Description: BL SHOP.PRO TOUCH CONTROL BOARD — Qty: 1 — UOM: PZ Code: PE2109A3 — Description: SP TOUCH COMPLETE CONTROL BOARD — Qty: 1 — UOM: PZ Code: VI1930A0 — Description: 5X25 ST. STEEL SCREW CHIP — Qty: 2 — UOM: PZ Code: VM2147A0 — Description: ESD SPONGE PINK SMOOTH 410X343X15 M — Qty: 1 — UOM: PZ

ASM3408A/0.D02 - External cover

FRONT



ASM3408A/0.D02 - External cover

REAR



ASM3408A/0.D02 External cover

COMPONENT			SPARE PART		
Code	*Description*	*Image*	*Code*	*Description*	*Components list*
VM1750A	BRASS COMB CLAM		KVM1750A	COMB TERMINAL BLOCK KIT	Code: VM1750A0 — Description: BRASS COMB CLAMP — Qty: 1 — UOM: PZ
CR1000A	HINGE LATCH L.M.		KCR1000A	LM HINGES LATCH KIT	Code: CR1000A0 — Description: HINGE LATCH L.M. — Qty: 1 — UOM: PZ Code: VI1875A0 — Description: SCREW M5X10 TC1/2T INOX — Qty: 2 — UOM: PZ
VM2249A	COOKING CHAMBER FRONT CORNER		KVM2249A	CHAMBER FRONT PROFILE CORNER KIT	Code: VM2249A0 — Description: COOKING CHAMBER FRONT CORNER — Qty: 1 — UOM: PZ
0D2409A	SP600 INF FRONT PROFILE DROP DOWN DOOR		0D2409A0	SP600 INF FRONT PROFILE DROP DOWN DOOR	
0E1381A	SP600 EXTERNAL BOTTOM PANEL		0E1381A0	SP600 EXTERNAL BOTTOM PANEL	

ASM3408A/0.D02 External cover

COMPONENT			SPARE PART		
Code	*Description*	*Image*	*Code*	*Description*	*Components list*
VM2502A	BAKERLUX SHOP.PRO CHIMNEY RING		KVM2502A	BAKERLUX SHOP.PRO CHIMNEY RING KIT	Code / Description / Qty / UOM VM2502A0 BAKERLUX SHOP.PRO CHIMNEY RIN 1 PZ VM2502A0 BAKERLUX SHOP.PRO CHIMNEY RIN 1 PZ
VE1295A	MK 16A 230V DOOR MICROSWITCH		KVE1295A	16A 230V DOOR MICROSWITCH KIT	Code / Description / Qty / UOM VE1295A0 MK 16A 230V DOOR MICROSWITC 1 PZ
VM2508A	BAKERLUX SHOP.PRO DOOR SWITCH COVER		KVM2508A	BAKERLUX SHOP.PRO MICROSWITCH COVER KIT	Code / Description / Qty / UOM VM2508A0 BAKERLUX SHOP.PRO DOOR SWITCH COVE 1 PZ VM2508A0 BAKERLUX SHOP.PRO DOOR SWITCH COVE 1 PZ
VM2481A	FRONT EXTERNAL COVER LEFT CAP S		KVM2481A	BL SP LEFT EXT COVER FRONT PANEL CAP KIT	Code / Description / Qty / UOM VM2481A0 FRONT EXTERNAL COVER LEFT CAP SP 1 PZ VM2481A0 FRONT EXTERNAL COVER LEFT CAP SP 1 PZ
VM2480A	FRONT EXTERNAL COVER RIGHT CAP SP		KVM2480A	BL SP RIGHT EXT COVER FRONT PANEL CAP	Code / Description / Qty / UOM VM2480A0 FRONT EXTERNAL COVER RIGHT CAP SP 1 PZ VM2480A0 FRONT EXTERNAL COVER RIGHT CAP SP 1 PZ

ASM3408A/0.D02 External cover

COMPONENT			SPARE PART		
Code	*Description*	*Image*	*Code*	*Description*	*Components list*
VM1631A			KVM1631A	CAP FOR INTERNAL GLASS 10 PCS KIT	Code: VM1631A0 — Description: — Qty: 10 — UOM: PZ
VM2490A	460X330 SP EXT FRONT BOTTOM GASKET		KVM2490A	SP 460X330 EXT BOTTOM PANEL GASKET KIT	VM1794A0 — 250X4.8 PA66 BLACK CLAMP — 1 — PZ VM2103A0 — CLAMP LOCK — 1 — PZ VM2490A0 — 460X330 SP EXT FRONT BOTTOM GASKET — 2 — PZ VM2490A0 — 460X330 SP EXT FRONT BOTTOM GASKET — 2 — PZ
VM2491A	460X330 BL SP LATER BOTTOM PANEL GASKET		KVM2491A	SP 460X330 LAT BOTT PANEL GASKET 2PC KIT	VM1631A0 — — 4 — PZ VM1794A0 — 250X4.8 PA66 BLACK CLAMP — 1 — PZ VM2103A0 — CLAMP LOCK — 1 — PZ VM2491A0 — 460X330 BL SP LATER BOTTOM PANEL GASKE — 2 — PZ VM2491A0 — 460X330 BL SP LATER BOTTOM PANEL GASKE — 2 — PZ
VM1222A	CABLE LOCKS SP ACCESSORIES EL CONNECTION		VM1222A0	CABLE LOCKS SP ACCESSORIES EL CONNECTION	

ASM3408A/0.D02 External cover

COMPONENT			SPARE PART		
Code	*Description*	*Image*	*Code*	*Description*	*Components list*
VM2455A	BL SP CONTROL BOARD CABLE PASSAGE CLIP		KVM2455A	BL SP CONTR BOARD PASSAGE CABLE CLIP KIT	Code / Description / Qty / UOM VM2455A0 — BL SP CONTROL BOARD CABLE PASSAGE CLI — 1 — PZ VM2455A0 — BL SP CONTROL BOARD CABLE PASSAGE CLI — 1 — PZ
VN1175A	230V 50/60HZ 120X120 COOLING DOWN FAN		KVN1175A	120X120 230V 50/60HZ COOLING FAN KIT	Code / Description / Qty / UOM VN1175A0 — 230V 50/60HZ 120X120 COOLING DOWN FAN — 1 — PZ VN1175A0 — 230V 50/60HZ 120X120 COOLING DOWN FAN — 1 — PZ
VM2495A	SP COOLING FAN SUPPORT KIT		KVM2495A	COOLING FAN SUPPORT KIT	Code / Description / Qty / UOM VI1220A1 — 4,2X12 TCB SELF-TAPPING SCREW — 2 — PZ VM2495A0 — SP COOLING FAN SUPPORT KIT — 1 — PZ
0D2402B			0D2402B0		
0F1542B			0F1542B0		

ASM3402A/0.D01 - Cooking chamber

FRONT



ASM3402A/0.D01 - Cooking chamber

REAR

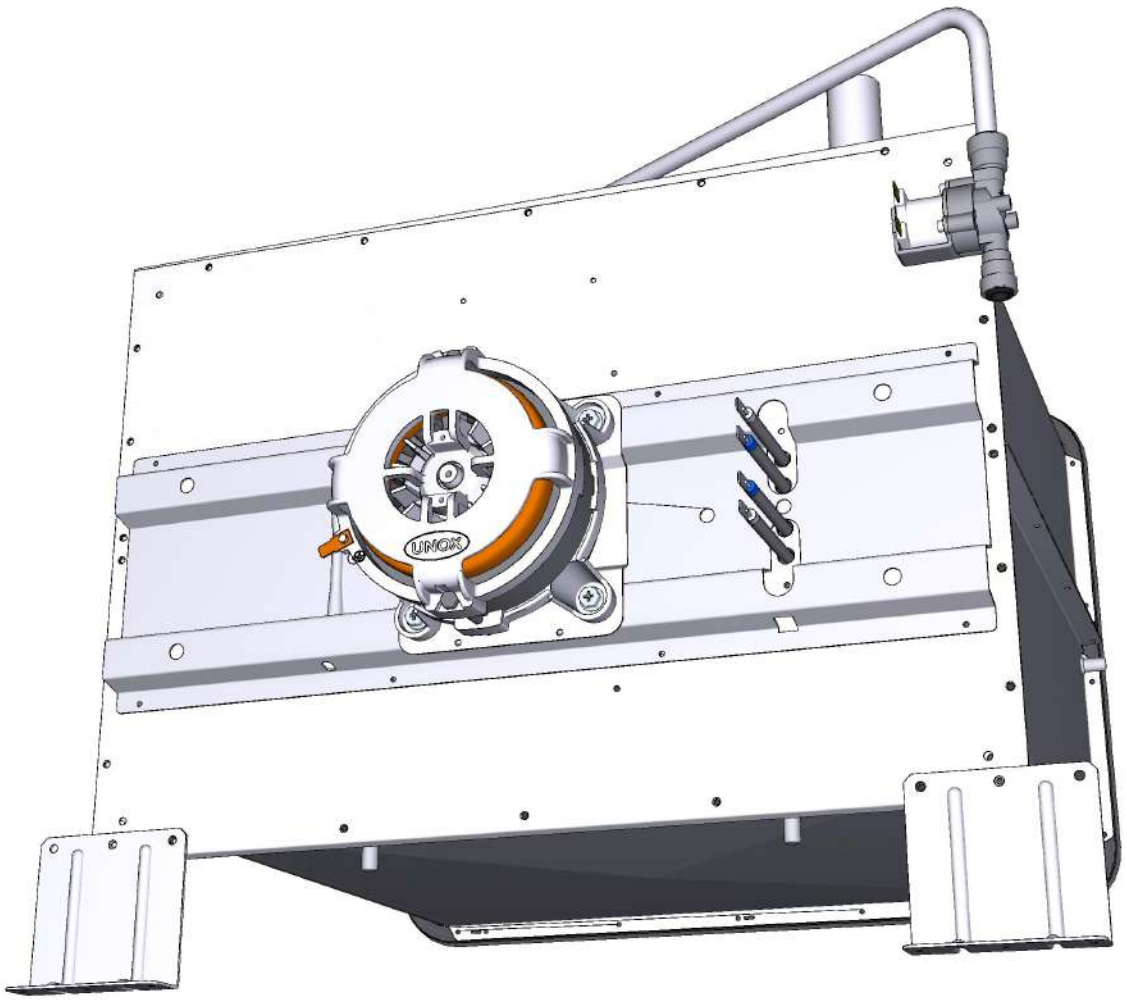

COMPONENT			SPARE PART		
Code	*Description*	*Image*	*Code*	*Description*	*Components list*
TR1105A			KTR1105A	PT100 L1000 TEMPERATURE PROBE KIT	Code / Description / Qty / UOM GN1120A0 — TEMPERATURE PROBE NTC SEAL — 1 — PZ GN1120A1 — — 1 — PZ GN1285A0 — NTC TEMPERATURE PROBE SEALING — 1 — PZ SL1045A0 — S57 BLACK SILICONE - 80ML CARTRIDGE — 1 — PZ TR1105A4 — — 1 — PZ VI1220A1 — 4,2X12 TCB SELF-TAPPING SCREW — 2 — PZ VM1464A1 — CT BT TEMPERATURE PROBE COVER — 1 — PZ
RC1170A	STAINLESS STEEL NUT M14 H=8 CH=22	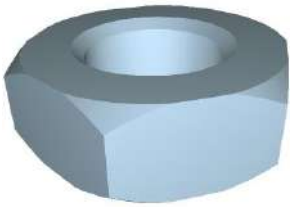	KRC1170A	M14 H8 CH22 NUT - 10 PCS. KIT	Code / Description / Qty / UOM RC1170A1 — STAINLESS STEEL NUT M14 H=8 CH=2 — 10 — PZ
GN1352A	L.M. TOUCH ARIANNA DOOR GASKET - GN1110A		KGN1352A	LM ARIANNA/BT CABINET DOOR GASKET KIT	Code / Description / Qty / UOM GN1110A2 — LINE MISS/XVC105-055/XK/XL DOOR GASKE — 1.600 — M
0H7875A	MUFFLE SUPPORT BRACKET SHOP.PR		0H7875A0	MUFFLE SUPPORT BRACKET SHOP.PR	

COMPONENT			SPARE PART		
Code	*Description*	*Image*	*Code*	*Description*	*Components list*
EL1251A	1-WAY WATER SOLENOID VALVE BROWN		KEL1251A	1 WAY SOLENOID VALVE KIT J.G.D8 D1	Code: EL1251A0 — Description: 1-WAY WATER SOLENOID VALVE BROW — Qty: 1 — UOM: PZ
0H3020A	MOTOR SHAFT SEALING DISC		0H3020A1	MOTOR SHAFT SEALING DISC	
MT1012A	330W 230V MOTOR		KMT1012A	MIND.MAPS 330W 230V MOTOR KIT	Code: 0H4305A1 — Description: ST. STEEL MOTOR SHAFT SEALING DISC — Qty: 1 — UOM: PZ Code: GN1140A2 — Description: MOTOR HOLDER GASKET — Qty: 1 — UOM: PZ Code: GN1140A3 — Description: — Qty: 1 — UOM: PZ Code: MT1012A0 — Description: 330W 230V MOTOR — Qty: 1 — UOM: PZ Code: VE1550A0 — Description: 5X3 MM NEODYMIUM MAGNET — Qty: 1 — UOM: PZ Code: VI1077A1 — Description: SCREW M6X12 TE INOX — Qty: 1 — UOM: PZ Code: VI1521A0 — Description: STAINLESS STEEL WASHER D=6 6592 — Qty: 1 — UOM: PZ Code: VI1966A0 — Description: M4X14 FLATHEAD SCREW — Qty: 1 — UOM: PZ Code: VM1635A0 — Description: MAGNET HOLDING DIS — Qty: 1 — UOM: PZ Code: VM1794A0 — Description: 250X4.8 PA66 BLACK CLAMP — Qty: 4 — UOM: PZ Code: VM2103A0 — Description: CLAMP LOCK — Qty: 4 — UOM: PZ

COMPONENT			SPARE PART		
Code	*Description*	*Image*	*Code*	*Description*	*Components list*
VN1172A			KVN1172A	D195 H40 8 BLADES FAN+NUT M8 KIT	Code / Description / Qty / UOM VI1077A1 SCREW M6X12 TE INOX 1 PZ VI1521A0 STAINLESS STEEL WASHER D=6 6592 1 PZ VN1172A0 1 PZ VN1172A0 1 PZ
GN1547A	SHAFT GASKET D11.8		GN1547A1	SHAFT GASKET D11.8	
0H7170A	MM MOTOR GLASS WOOL PLATE		0H7170A0	MM MOTOR GLASS WOOL PLATE	
RS1283A			KRS1283A	4TURN HEAT ELEM 3200W 230V+210W 160V KIT	Code / Description / Qty / UOM GN1327A0 HEATING ELEMENT GASKET 1 PZ RS1283A0 1 PZ SL1045A0 S57 BLACK SILICONE - 80ML CARTRIDGE 1 PZ VI1220A1 4,2X12 TCB SELF-TAPPING SCREW 1 PZ VM1794A0 250X4.8 PA66 BLACK CLAMP 2 PZ VM2103A0 CLAMP LOCK 2 PZ
VM1815A	LATERAL SUPPORTS FIXING BOLT		KVM1815A	MISS/MICRO/S4/S3 THUMB SCREW 10 PCS KIT	Code / Description / Qty / UOM VM1815A0 LATERAL SUPPORTS FIXING BOLT 10 PZ

COMPONENT			SPARE PART		
Code	*Description*	*Image*	*Code*	*Description*	*Components list*
GRL1010A	ARIANNA LINEMISS RIGHT/LEFT LATERAL GRID		KGRL1010A	R/L CHROM. PLATED LATERAL SUPP KIT	Code / Description / Qty / UOM GRL1010A2 — ARIANNA LINEMISS RIGHT/LEFT LATERAL GRID — 2 — PZ IP1508A1 — POLYSTYRENE U SHAPED PROFILE 2000X60X60 — 2 — M VM1059A1 — HEAT SHRINK FILM H800 — 1.500 — M
TB1574A	FUME CHIMNEY D30 SHOP PRO		TB1574A0	FUME CHIMNEY D30 SHOP PRO	
TB1568A	ARI-STE-ROS SP WELDED EXT HUMIDITY PIPE		TB1568A0	ARI-STE-ROS SP WELDED EXT HUMIDITY PIPE	
0C1759A			0C1759A0		
0G1652B			0G1652B0		

COMPONENT			SPARE PART		
Code	*Description*	*Image*	*Code*	*Description*	*Components list*
TB1578B			TB1578B0		

ASM3438A/0.D01 - Electrical system

FRONT

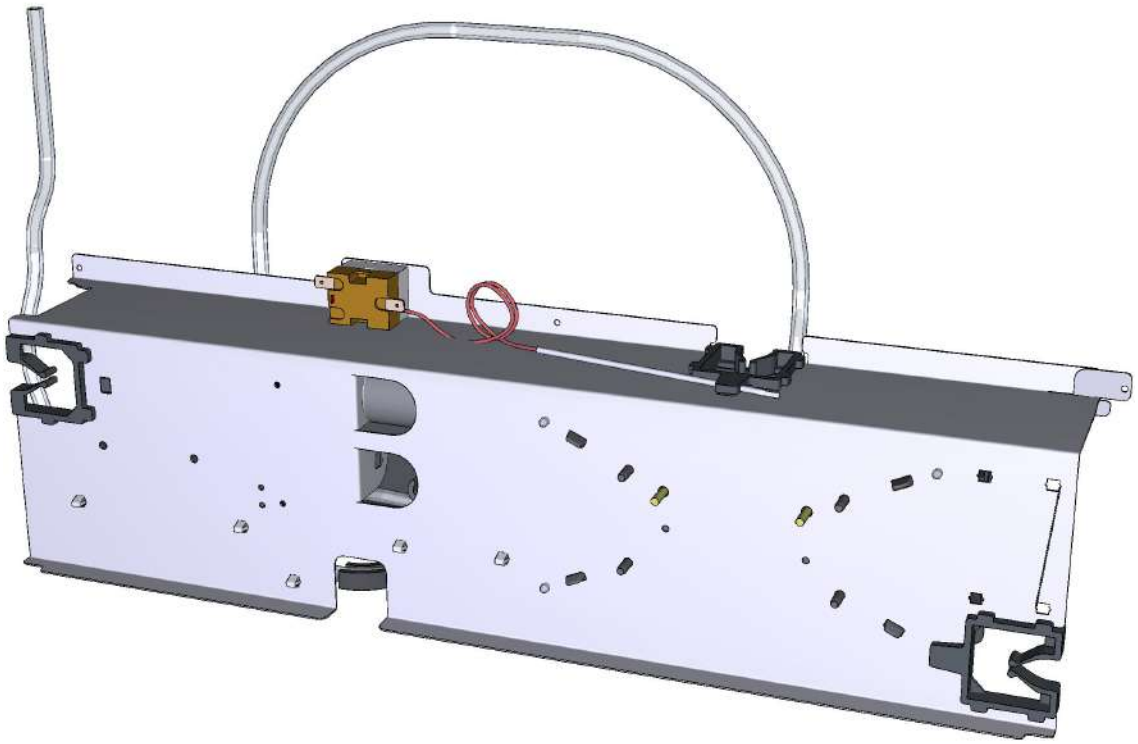

ASM3438A/0.D01 - Electrical system

REAR

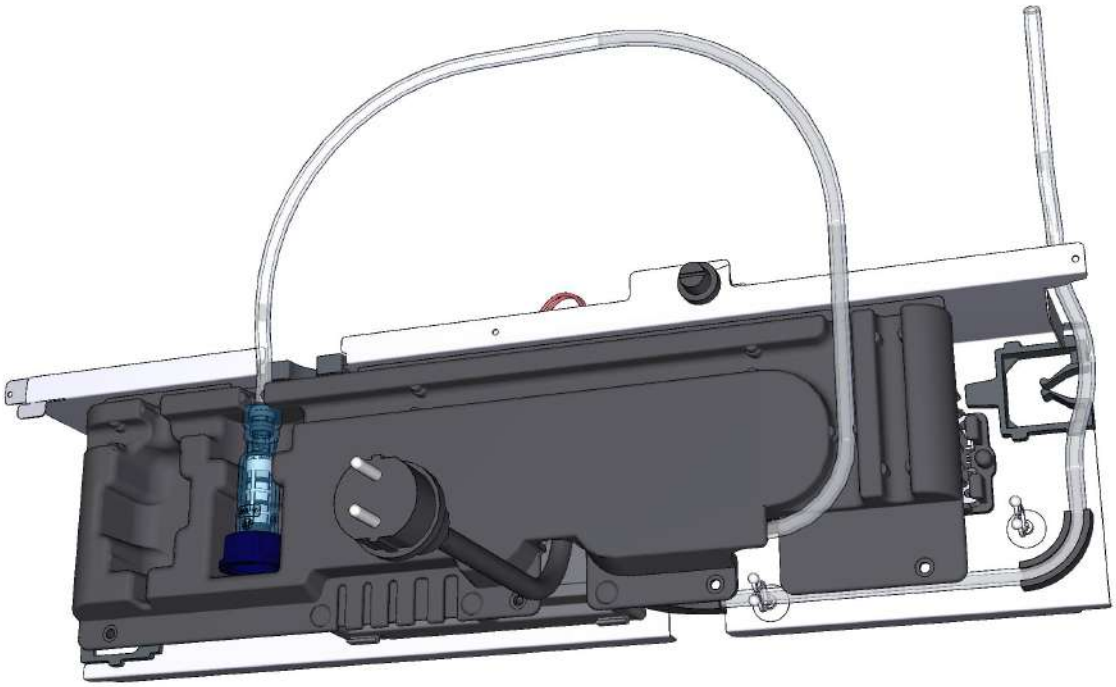

COMPONENT			SPARE PART		
Code	*Description*	*Image*	*Code*	*Description*	*Components list*
TR1136A	330°C 1 POLE SAFETY THERMOSTAT		KTR1136A	330°C SAFETY THERMOSTAT KIT	Code / Description / Qty / UOM 0H7030A0 THERMOSTAT BULB INLET COVER 1 PZ GN1531A0 THERMOSTAT BULB INLET SEALING 1 PZ SL1045A0 S57 BLACK SILICONE - 80ML CARTRIDGE 1 PZ TR1136A0 330°C 1 POLE SAFETY THERMOSTAT 1 PZ VI1220A1 4,2X12 TCB SELF-TAPPING SCREW 3 PZ
CN1003A	6,3 UF MOTOR CAPACITOR		KCN1003A	6,3 UF MOTOR CAPACITOR KIT	Code / Description / Qty / UOM CN1003A0 6,3 UF MOTOR CAPACITOR 1 PZ VI1931A0 M8 NUT+INDENTED WASHER D=8 X COND. 1 PZ VI1932A0 M8 NUT+INDENTED WASHER D=8 X COND. 1 PZ
VE1115A	20 A 230V 4 POLES MINICONTACTOR		KVE1115A	20A 230V 4 POLES MINICONTACTOR KI	Code / Description / Qty / UOM VE1115A0 20 A 230V 4 POLES MINICONTACTOR 1 PZ VM1075A1 PLASTIC CLIP TO FIX CONTACTORS 4 PZ
VM1056A	SMALL CONTACTOR BRACKET VE1115A		VM1056A0	SMALL CONTACTOR BRACKET VE1115A	

COMPONENT			SPARE PART		
Code	*Description*	*Image*	*Code*	*Description*	*Components list*
RC1006A	D8 PET PIPE GUIDE BEND		KRC1006A	20 PCS. Ø8 PET PIPE GUIDE BEND KI	Code / Description / Qty / UOM RC1006A0 — D8 PET PIPE GUIDE BEND — 20 — PZ
0P1021A	COMPONENTS HOLDING PANEL STE-ARI SP		0P1021A0	COMPONENTS HOLDING PANEL STE-ARI SP	
VM1187A	POWER BOARD FRAME SHOP.PRO		VM1187A0	POWER BOARD FRAME SHOP.PRO	
PE2102A	BL LED/TOUCH/PLUS 230 V POWER CARD		KPE2102A	BL LED/TOUCH/MASTER 230V POWER CARD KIT	Code / Description / Qty / UOM PE2102A0 — BL LED/TOUCH/PLUS 230V POWER BOARD KIT — 1 — PZ PE2102A1 — BL LED/TOUCH/PLUS 230 V POWER CARD — 1 — PZ PE2102A2 — BL LED/TOUCH/PLUS 230V POWER BOAR — 1 — PZ VI1988A0 — AUTOTHREADING SCREW 4,2X19 TCB+ INOX — 3 — PZ VM1187A0 — POWER BOARD FRAME SHOP.PRO — 1 — PZ VM2147A0 — ESD SPONGE PINK SMOOTH 410X343X15 M — 1 — PZ

COMPONENT			SPARE PART		
Code	*Description*	*Image*	*Code*	*Description*	*Components list*
CE1581A	CABLE H07RNF 3G1.5 L1.5MT+K1/6+SCHUKO		CE1581A0	CABLE H07RNF 3G1.5 L1.5MT+K1/6+SCHUKO	
MR1025A			KMR1025A	3 POLES TERMINAL BLOCK KIT	Code: MR1025A1 — Description: — Qty: 1 — UOM: PZ
VI1328A			VI1328A0		
VM1188A	BL SHOP.PRO POWER BOARD WIRE PASSAGE	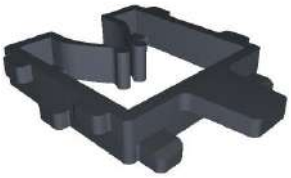	VM1188A0	BL SHOP.PRO POWER BOARD WIRE PASSAGE	
VM2484A	ELECTRICAL CONNECTION CABLE CLAMP		KVM2484A	CABLE LOCKS ELECTRICAL CONNECTION KIT	Code: VM2484A0 — Description: ELECTRICAL CONNECTION CABLE CLAMP — Qty: 1 — UOM: PZ Code: VM2484A0 — Description: ELECTRICAL CONNECTION CABLE CLAMP — Qty: 1 — UOM: PZ
			KVM2482A	BAKERLUX SP ELECTR COMPONENTS HOLDER KIT	Code: VM2482A0 — Description: ELECTR COMPONENTS HOLDER FRAME SHOP.PRO — Qty: 1 — UOM: PZ

COMPONENT			SPARE PART		
Code	*Description*	*Image*	*Code*	*Description*	*Components list*
VM2484A	ELECTRICAL CONNECTION CABLE CLAMP		KVM2482A	BAKERLUX SP ELECTR COMPONENTS HOLDER KIT	Code / Description / Qty / UOM VM2482A0 ELECTR COMPONENTS HOLDER FRAME SHOP.PRO 1 PZ VM2484A0 ELECTRICAL CONNECTION CABLE CLAMP 1 PZ VM2484A0 ELECTRICAL CONNECTION CABLE CLAMP 1 PZ
TB3280A			KTB2529A	Ø8 TRANSPARENT HUMIDITY PIPE 2 M KIT	Code / Description / Qty / UOM TB1815A0 7,93X4,75 PE TRANSP. PIPE (JG #PE08100N) 2 M
VM2482A	ELECTR COMPONENTS HOLDER FRAME SHOP.PRO		KVM2482A	BAKERLUX SP ELECTR COMPONENTS HOLDER KIT	Code / Description / Qty / UOM VM2482A0 ELECTR COMPONENTS HOLDER FRAME SHOP.PRO 1 PZ VM2482A0 ELECTR COMPONENTS HOLDER FRAME SHOP.PRO 1 PZ VM2484A0 ELECTRICAL CONNECTION CABLE CLAMP 1 PZ VM2484A0 ELECTRICAL CONNECTION CABLE CLAMP 1 PZ
VM2483A	SHOP PRO COMPONENTS HOLDER COVER		KVM2483A	BL SHOP.PRO COMPONENTS HOLDER COVER KIT	Code / Description / Qty / UOM VM2483A0 COMPONENTS HOLDER COVER SHOP.PRO 1 PZ VM2483A0 COMPONENTS HOLDER COVER SHOP.PRO 1 PZ VM2483A1 SHOP PRO COMPONENTS HOLDER COVER 1 PZ

COMPONENT			SPARE PART		
Code	*Description*	*Image*	*Code*	*Description*	*Components list*
VL1145A			KVL1145A	3/4-JG8 FITTING WITH FILTER AND VNR KIT	Code: VL1145A0 · Description: · Qty: 1 · UOM: PZ