FIRIN KOMPLE/OVEN COMPLETE

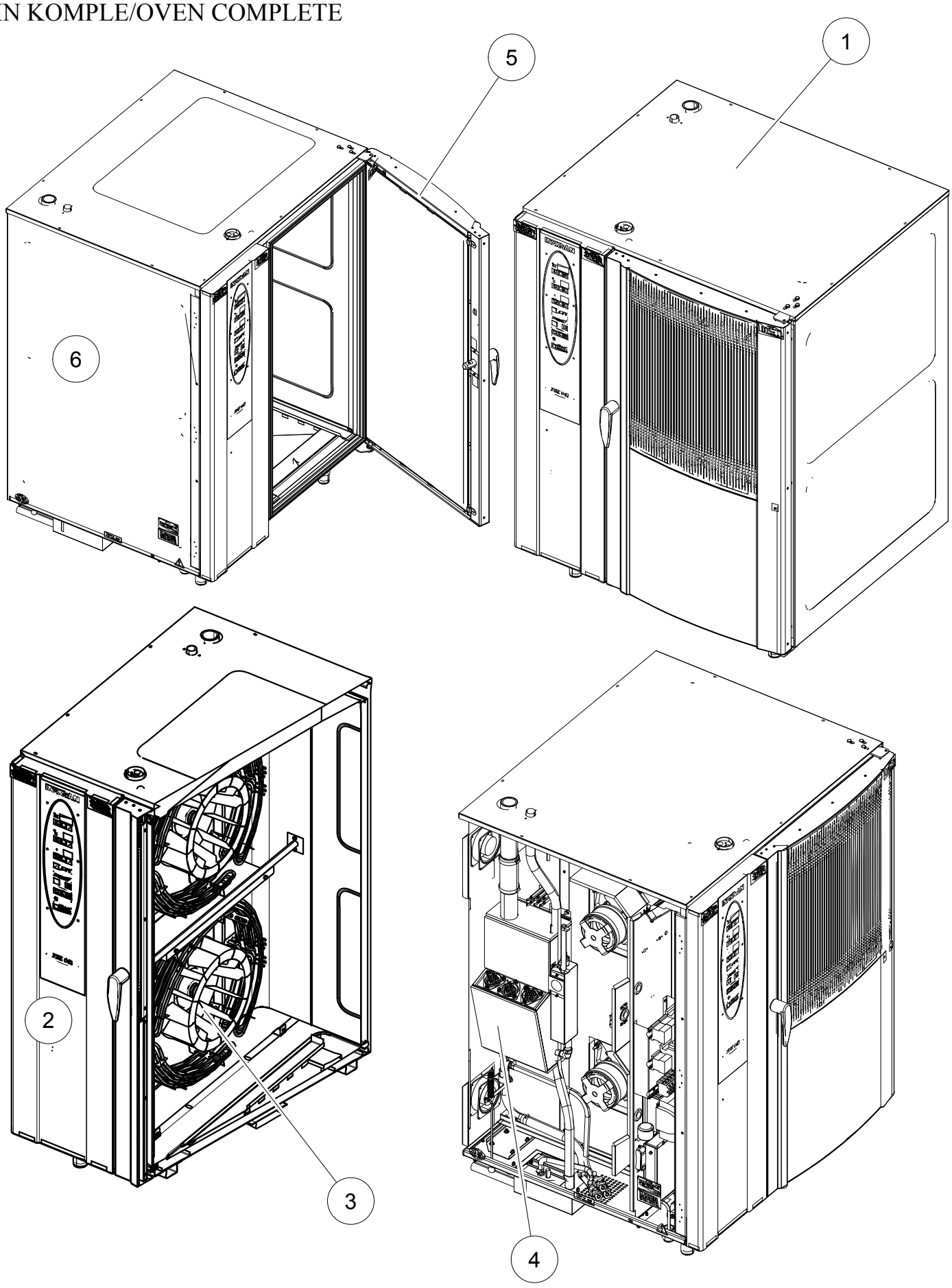

FIRIN KOMPLE/OVEN COMPLETE

S.NO	PARÇA NO	PARÇA ADI	PART NAME	ADET
1	3710 4010	FBE 042 FIRIN	FBE 042 OVEN	1
2	--	KONTROL PANELİ	CONTROL PANEL	1
3	---	FANLAR	FANS	1
4	---	BOYLER KOMPLE	BOILER COMPLETE	1
5	---	KAPI	DOOR	1
6	----	DIŞ SACLAR	OUTER PLATES	1

KONTROL PANELI/CONTROL PANEL

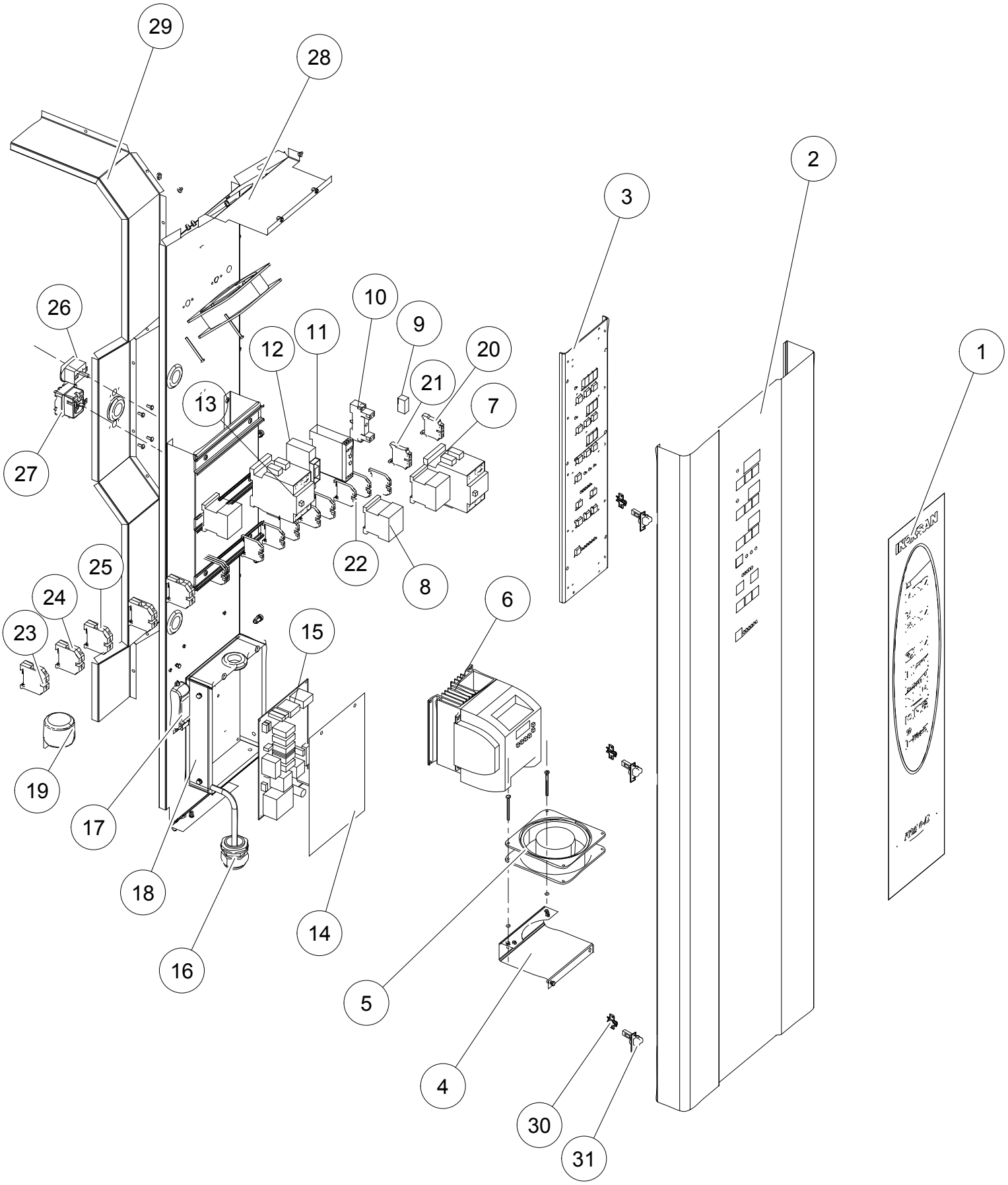

KONROL PANELİ/CONTROL PANEL

S.NO	PARÇA NO	PARÇA ADI	PART NAME	ADET
1	2211 9112	SERİGRAF	SCREENPRINT	1
2	2211 1121	PANEL KOMPLE	PANEL COMPLETE	1
3	2210 7011	KUMANDA KARTI KOMPLE (° C)	CONTROL CARD COMPLETE (°C)	1
	2210 7040	KUMANDA KARTI KOMPLE (F)	CONTROL CARD COMPLETE (F)	1
4	2210 1696	FAN BAĞLAMA SACI	FAN CONNECTION PLATE	1
5	1014 0002	FAN	FAN	3
6	1017 0106	İNVERTER 1,5 kW SIEMENS SINAMICS	INVERTOR 1,5 kW SIEMENS SINAMICS	1
--	1017 0102	MOTOR HIZ KONTROL ÜNİTESİ	MOTOR SPEED CONTROL UNIT	1
7	1006 0261	DILM32-10(230V50HZ,240V60HZ)	DILM32-10(230V50HZ,240V60HZ)	1
8	1006 0260	DILM12-10(230V50HZ,240V60HZ)	DILM12-10(230V50HZ,240V60HZ)	1
9	1009 0025	PCB RÖLE RT 424012 12VDC 8A 2 C/O 8PİN	PCB RELAY RT 424012 12VDC 8A 2 C/O 8PİN	1
10	1009 0026	RÖLE SOKETİ YRT 78625 RAY TİPİ 8PİN 1-2 C/O İ	RELAY SOCKET YRT 78625 FOR RAIL TYPE 8PIN 1	1
11	1009 0009	KE-SS2 SAĞ/SOL ZAM.RÖL.OFF	KE-SS2 RIGHT/LEFT TIM.RELAY.OFF	1
12	1015 0021	W- OTOMAT SİGORTA 5SQ2160	W- AUTOMAT FUSE 5SQ2160	1
13	1006 0261	DILM32-10(230V50HZ,240V60HZ)	DILM32-10(230V50HZ,240V60HZ)	2
14	2212 9112	ASETAT	ACETATE	1
15	2210 7015	GÜÇ KARTI	POWER CARD	1
16	1003 1003	REKOR BAKALİT	CONNECTOR BAKALITE	1
17	1015 1003	ELEKTRONİK TRANSFORMATÖR	ELECTRONIC TRANSFORMER	1
18	2212 1094	GÜÇ KARTI KUTU SACI	POWER CARD BOX PLATE	1
19	1009 0023	DC BUZER 12V	DC BUZZER 12V	1
20	1004 0038	AVK 6/10 T SARI/YEŞİL TOP.KLEMENS	AVK 6/10 T YELLOW/GREEN COL.CONNECTOR	1
21	1004 0004	AVK 6 MAVİ RAY KLEMENS	AVK 6 BLUE RAIL CONNECTOR	1
22	1004 0003	AVK 2,5 RD GRİ RAY KLEMENS	AVK 2,5 RD GREY RAIL CONNECTOR	11
23	1004 0043	AVK 16/35 T SARI/YEŞİL TOP.KLEMENS	AVK 16/35 T YELLOW/GREEN COL.CONNECTOR	1
24	1004 0037	RAY KLEMENSİ AVK 16 RD MAVİ	RAY CONNECTOR AVK 16 RD BLUE	1
25	1004 0033	RAY KLEMENSİ AVK 16 RD GRİ	RAY CONNECTOR AVK 16 RD GREY	3
26	1010 0004	TERMOSTAT	THERMOSTAT	1
27	1010 0054	TERMOSTAT LİMİT	THERMOSTATE LIMIT	1
28	2211 1105	PANO SACI FBE042	PANEL PLATE FBE042	1
29	2211 0317	HAVA YÖNLENDİRME SACI	AIR GUIDANCE PLATE	1
30	1311 0032	MENTEŞE ALTLIĞI	HINGE SILL	3
31	1311 0033	MENTEŞE GÖVDESİ	HINGE BODY	3

FAN KOMPLE/FAN COMPLETE

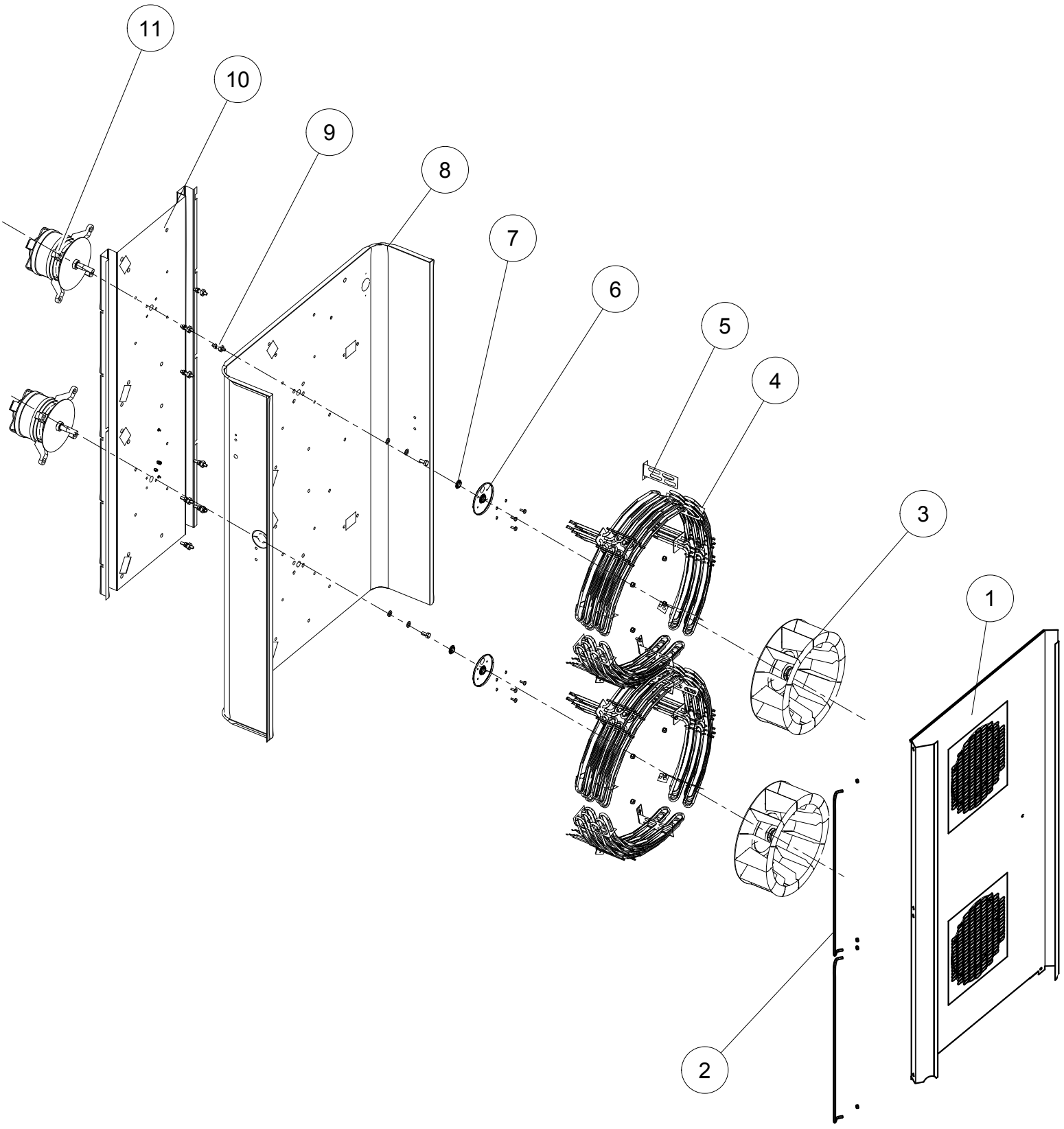

FAN KOMPLE/FAN COMPLETE

S.NO	PARÇA NO	PARÇA ADI	PART NAME	ADET
1	2211 0410	FAN PERDESİ KOMPLE	FAN GUARD COMPLETE	1
2	2210 3057	PERDE MİLİ	GUARD SHAFT	2
3	2210 0420	FAN KOMPLE	FAN COMPLETE	2
4	2210 7022	ISITICI 6000W 220V	HEATER 6000W 220V	6
5	2211 0234	ISITICI MERKEZLEME SACI	HEATER CENTRING PLATE	6
6	2210 0148	MOTOR YATAKLAMA SACI	MOTOR BEDDING PLATE	2
7	1313 2000	SIZDIRMAZLIK ELEMANI F476274 200 091.740	SEALING ELEMENT F476274 200 091.740	2
8	2211 1103	İÇ ÇEVRE SACI SOL	INNER CIRCUMFERENCE PLATE LEFT	1
9	2210 3028	SAPLAMA	STUD	8
10	2211 0474	ATKI SACI	CROSS MEMBER PLATE	1
11	1013 0023	MOTOR	MOTOR	2

BOYLER KOMPLE
BOILER COMPLETE

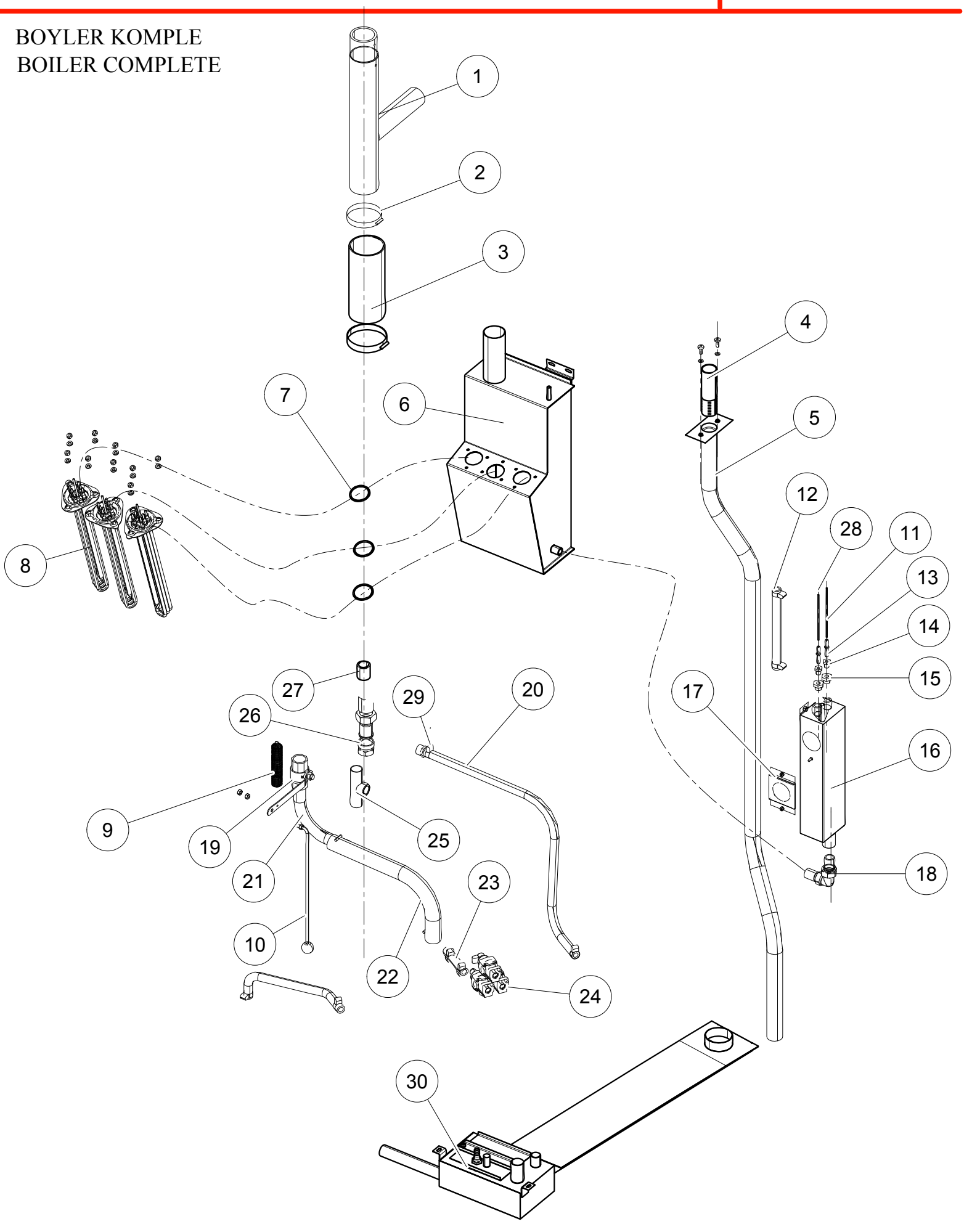

BOYLER KOMPLE/BOILER COMPLETE

S.NO	PARÇA NO	PARÇA ADI	PART NAME	ADET
1	2211 4015	BUHAR GİRİŞ BORUSU	STEAM INTAKE PIPE	1
2	1310 0007	KELEPÇE	CLAMP	2
3	2211 6102	BOYLER ARA HORTUMU	BOILER INTERMEDIATE HOSE	1
4	2210 4050	BUHAR ÇIKIŞ BORUSU KOMPLE	STEAM DISCHARGE PIPE COMPLETE	1
5	2211 6113	YOĞUŞTURUCU ÇIKIŞ HORTUMU	CONDENSER DISCHARGE HOSE	1
6	2211 1050	BOYLER KOMPLE	BOILER COMPLETE	1
7	1207 1003	O-RING 1022	O-RING 1022	3
8	2100 7023	ISITICI 4500W 220/380V	HEATER 4500W 220/380V	3
9	2000 3104	ÇEKME YAYI	RETURN SPRING	1
10	2211 4040	VANA KUMANDA KOLU KOMPLE	VALVE CONTROL ARM COMPLETE	1
11	2211 4014	SEVİYE ÇUBUĞU UZUN	DIPSTICK LONG	1
12	2211 6108	HORTUM	HOSE	1
13	2200 8057	SEVİYE ÇUBUK YATAĞI	DIPSTICK MOUNT	2
14	2200 8054	SEVİYE ÇUBUĞU SIKMA REKORU	DIPSTICK TIGHTENING CONNECTOR	2
15	2200 8053	SEVİYE BAĞLANTI REKORU	LEVEL CONNECTOR	2
16	2211 1090	SU SEVİYE HAZNESİ KLOMPLE	WATER LEVEL CONTAINER COMPLETE	1
17	2211 1062	BUHAR SIZDIRMAZLIK SACI	STEAM SEALING PLATE	1
18	1104 1505	KÖŞE REKORU	CORNER CONNECTOR	1
19	1201 0005	VANA KÜRESEL	VALVE BALL	1
20	2211 6106	BOYLER GİRİŞ HORTUMU	BOILER INTAKE HOSE	1
21	2211 4022	BOYLER ALTI VANA ÇIKIŞ BORUSU	VALVE DISCHARGE PIPE UNDER BOILER	1
22	2211 6103	BOYLER TAHLİYE HORTUMU	BOILER DISCHARGE HOSE	1
23	2211 6109	HORTUM	HOSE	1
24	1202 0006	SELENOİD VALF	SELENOID VALVE	1
25	2211 4030	BOYLER SU GİRİŞ BORUSU KOMPLE	BOILER WATER INTAKE PIPE COMPLETE	1
26	1205 0401	REKOR	CONNECTOR	1
27	1205 0201	MANŞON	SLEEVE	1
28	2211 4013	SEVİYE ÇUBUĞU KISA	DIPSTICK SHORT	1
29	1310 0001	KELEPÇE	CLAMP	2
30	2211 1030	YOĞUŞTURUCU KOMPLE	CONDENSER COMPLETE	1

KAPI KOMPLE/DOOR COMPLETE

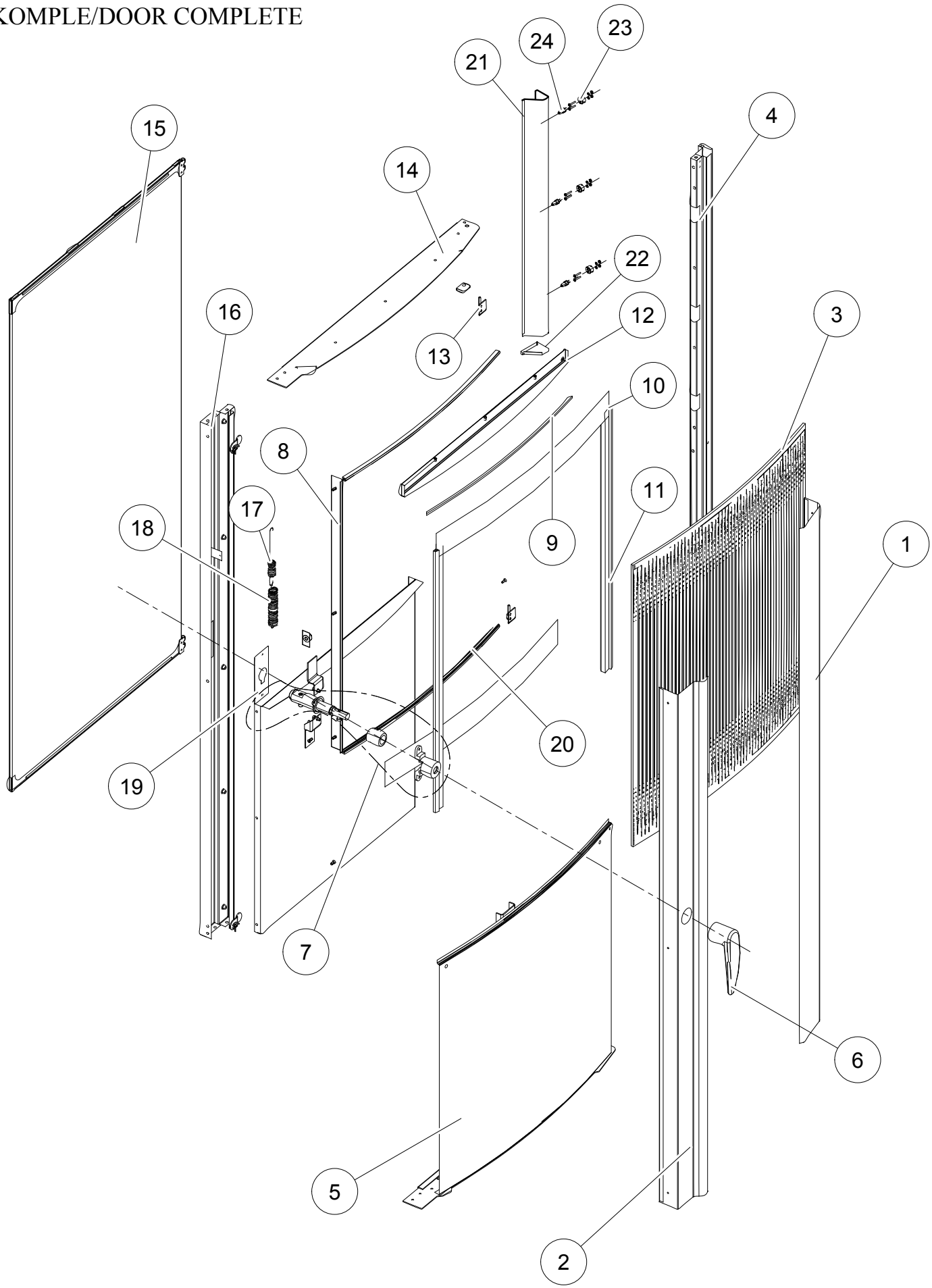

KAPI KOMPLE/DOOR COMPLETE

S.NO	PARÇA NO	PARÇA ADI	PART NAME	ADET
1	2211 0320	KAPI SACI SAĞ DIŞ KOMPLE	DOOR PLATE OUTER RIGHT COMPLETE	1
2	2211 0321	KAPI SACI SOL KOMPLE	DOOR PLATE LEFT COMPLETE	1
3	2211 9022	KAPI CAMI DIŞ	DOOR GLASS OUTER	1
4	2211 0451	KAPI SACI SAĞ İÇ KOMPLE	DOOR PLATE INNER RIGHT COMPLETE	1
5	2211 0310	KAPI KAPLAMA ALT KOMPLE	DOOR COATING BOTTOM COMPLETE	1
6	2211 6228	KAPI KOLU	DOOR HANDLE	1
7	2211 3150	FIRIN KAPI KİLİDİ	OVEN DOOR LOCK	1
8	2211 0342	KAPI CAM YANI SACI SOL	DOOR GLASS SIDE PLATE LEFT	1
9	2211 3138	CAM ÇITASI	GLASS MOULDING	2
10	2210 0343	CAM ARKA SACI	GLASS REAR PLATE	2
11	2211 6003	CONTA	GASKET	2
12	2210 0455	BAĞLANTI SACI ÜST	FITTING PLATE TOP	1
13	2210 0361	MENTEŞE ÜST SACI KOMPLE	HINGE TOP PLATE COMPLETE	2
14	2211 0324	KAPI SACI ÜST	DOOR PLATE TOP	1
15	2211 0360	İÇ CAM KOMPLE	INNER GLASS COMPLETE	1
16	2211 0453	KAPI SACI SOL YAN İÇ	DOOR PLATE INNER LEFT SIDE	1
17	2210 3165	KAPI KİLİT YAYI	DOOR LOCK SPRING	1
18	2000 3104	ÇEKME YAYI	RETURN SPRING	1
19	2211 0356	KİLİT YUVASI KAPAK SACI	LOCK HOUSING COVER PLATE	1
20	2211 6005	CONTA	GASKET	2
21	2210 0352	LAMBA BAĞLAMA SACI	LAMP CONNECTION NPLATE	1
22	2210 0456	LAMBA KAPAK SACI ALT	LAMP COVER PLATE LOWER	1
23	1008 1003	LAMBA SOKETI PORSELEN	LAMP SOCKET PORCELAIN	3
24	1008 0304	LAMBA HALOJEN	LAMP HALOGEN	3

DIS SACLAR/OUTER PLATES

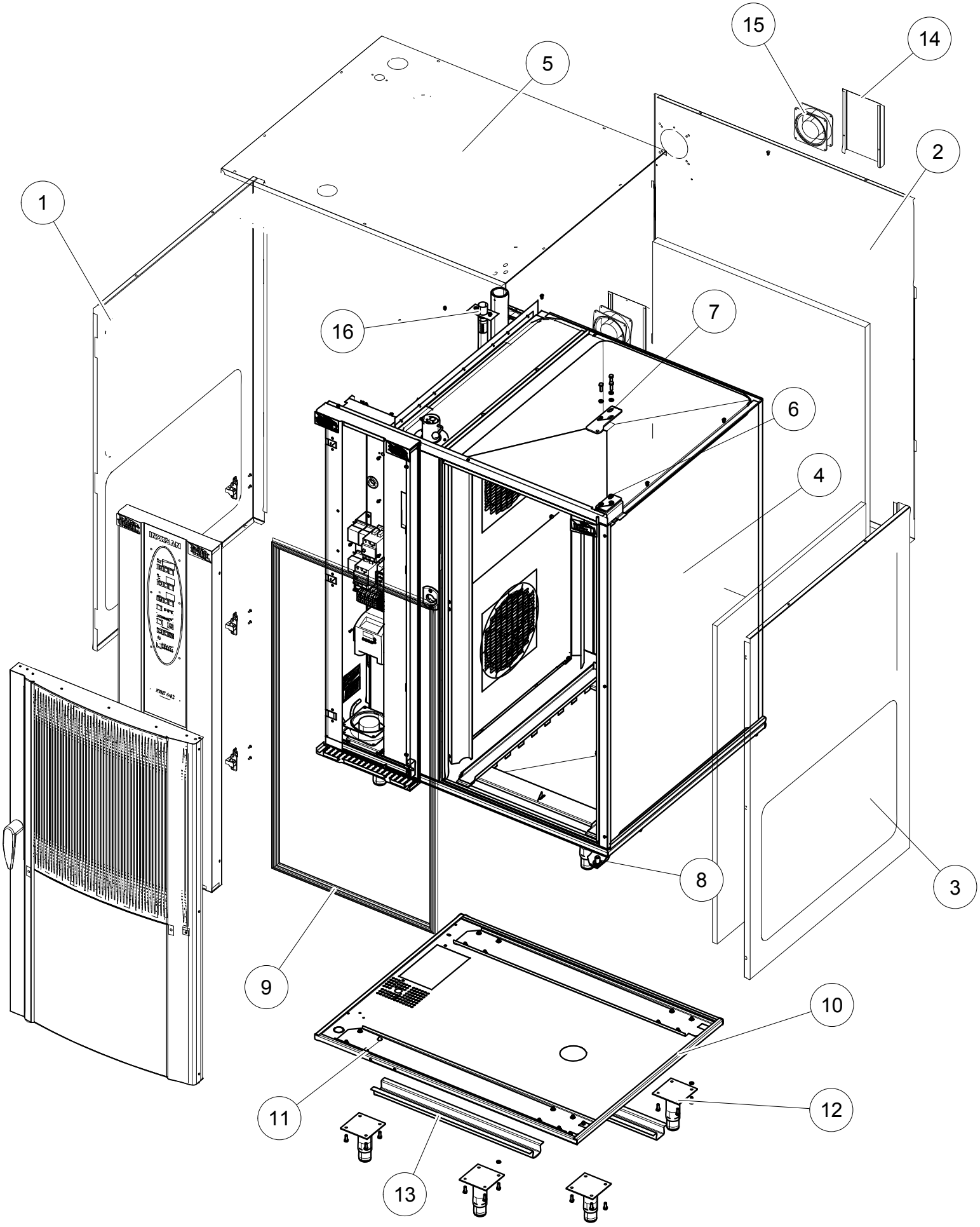

DIŞ SACLAR/OUTER PLATE

S.NO	PARÇA NO	PARÇA ADI	PART NAME	ADET
1	2211 0493	YAN SAC SOL	SIDE PLATE LEFT	1
2	2211 0479	ARKA SAC	REAR PLATE	1
3	2211 0494	YAN SAC SAĞ	SIDE PLATE RIGHT	1
4	2211 1100	İÇ ÇEVRE KOMPLE	INNER CIRCUMFERENCE COMPLETE	1
5	2211 1106	ÜST SAC	TOP PLATE	1
6	2210 2065	TAKVİYE SACI	SUPPORT PLATE	1
7	2210 2070	MENTEŞE SACI ÜST KOMPLE	HINGE PLATE TOP COMPLETE	1
8	2211 0441	KAPI ALT MENTEŞE YATAKLI KOM.	DOOR LOWER HINGE BED COMPLETE	1
9	2211 6024	FIRIN KAPI CONTASI	OVEN DOOR GASKET	1
10	2211 1006	ŞASE GÖVDE SACI	FRAME BODY PLATE	1
11	2210 0006	TABAN TAKVİYE SACI	LOWER SUPPORT PLATE	2
12	2211 0020	AYAK KOMPLE	FOOT COMPLETE	4
13	2211 1005	ŞASE DESTEK SACI	FRAME SUPPORT PLATE	2
14	2211 1609	HAVA YÖNLENDİRME SACI	AIR GUIDANCE PLATE	2
15	1014 0002	FAN	FAN	3
16	2210 4050	BUHAR ÇIKIŞ BORUSU KOMPLE	STEAM DISCHARGE PIPE COMPLETE	1