C O M B I T H E R M®
E L E C T R I C

Зип Общепит
vsezip.ru
+7(812)987-08-81

ecosmart™

TECHNICAL SERVICE MANUAL

ALTO SHAAM®

Зип Общепит
vsezip.ru
+7(812)587-08-81

How to Use this Technical Service Manual

This manual has been compiled as a complete resource for a technician working on Combitherm Electric models. It includes necessary product information and drawings, along with helpful troubleshooting procedures.

Introduction gives a quick overview of the Combitherm Electric line to aid in model identification.

Sections 1 through 5 contain information applying to all Combitherm Electric models:

- **CONTROL PANEL IDENTIFICATION** includes information on using the controllers and operating instructions. It is the same material supplied to the customer.
- **PREVENTIVE MAINTENANCE** includes procedures for cleaning, performing a generator flush and decalcifying. This information is also supplied to the customer.
- **SERVICE MODE AND ERROR CODES** explains the special programming available to you as a technician to view status, make adjustments and test functions on models equipped with Standard and Deluxe Controllers. Information is also included on the use of displayed error codes to resolve problems and on the functions that can be operated under fault conditions.
- **TROUBLESHOOTING TREES** are provided for the most common conditions you will be required to address.
- **COMBITHERM PARTS** has drawings and lists of available parts that are common to all electric models.

Sections 6 through 15 contain information that is specific to each model:

- The model's Technical Data Sheet
- Parts Information that is unique to the model, including its door, directional panel and steam generator or pressure box
- Wiring Diagrams
- Ladder Diagrams

Navigation

On this CD, starting with the Main Table of Contents on the following page, you may click on any item that has a page number and quickly jump to the information you need. Note that you may Return to the Main Table of Contents from the bottom of any Section Contents page.

Printing

From this CD, you may print the Current Page or any range of pages. If you would like to print out a complete manual for a specific model, print pages 1 – 102 (Sections 1 – 5) along with the pages in that model's section (7.14 ES, for example). Here's a tip: Because printers vary in their capacity to handle large drawings, make a test print of one of the Wiring Diagrams before printing the model's section.

TABLE OF CONTENTS

ЗипОбЦентр
vsezip.ru
+7(812)987-08-81

How to Use this Technical Service Manual 2

Introduction 4

1 — Control Panel Identification 5

2 — Preventive Maintenance 49

3 — Service Mode and Error Codes 63

4 — Troubleshooting Trees 71

5 — Combitherm Parts 91

6 — 6.10 ES 103

7 — 6.10 ESi 117

8 — 6.10 ESiN 131

9 — 10.10 ES 145

10 — 10.10 ESi 159

11 — 10.10 ESiN 173

12 — 7.14 ES 189

13 — 7.14 ESi 203

14 — 10.18 ES 217

15 — 10.18 ESi 229

Зип Общепит
vsezip.ru
+7(812)987-08-81

INTRODUCTION

MODEL NUMBERS

This manual covers the following electric models:

Steam Generator Models	Boiler-Free Models	Narrow Boiler-Free Models
6.10ES	6.10ESi	6.10ESiN
10.10ES	10.10ESi	10.10ESiN
7.14ES	7.14ESi	
10.18ES	10.18ESi	

CONTROLLERS

- Standard is a touch key controller.
- Deluxe is a touch key controller with programmable Rapid-Touch™ keys.
- S-Control is rotary dial controller.

FEATURES AND OPTIONS

- Recessed Door is available on all models.
- Smoker Mode is available on select boiler-free models.
- Core Temp Probe (single point) is optional on S-control models.

MODES

The Combitherm combination oven/steamer is a multipurpose oven used for:

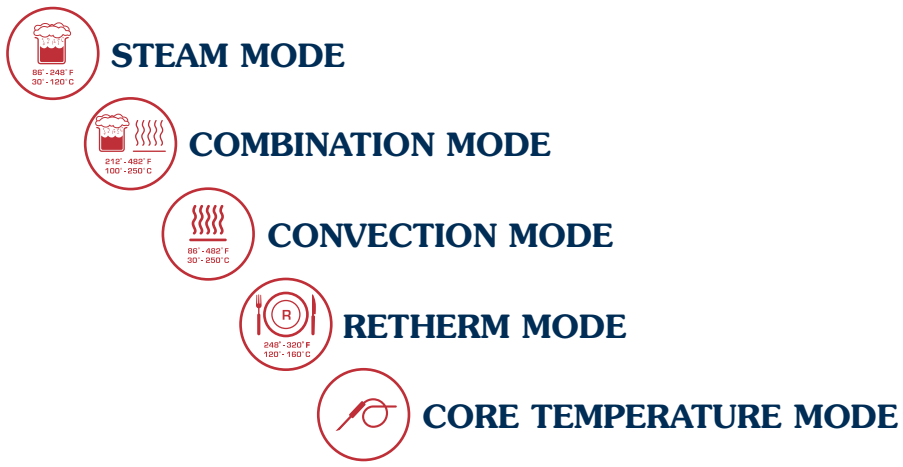

Зип Общепит

CONTROL PANEL IDENTIFICATION

vsezip.ru
+7(812)987-08-81

Standard and Deluxe Control 6

S-Control 45

Return to Main Table of Contents 3

CONTROL PANEL IDENTIFICATION
STANDARD AND PROGRAMMABLE DELUXE MODELS

Зип Общепит
vsezip.ru
+7(812)987-08-81

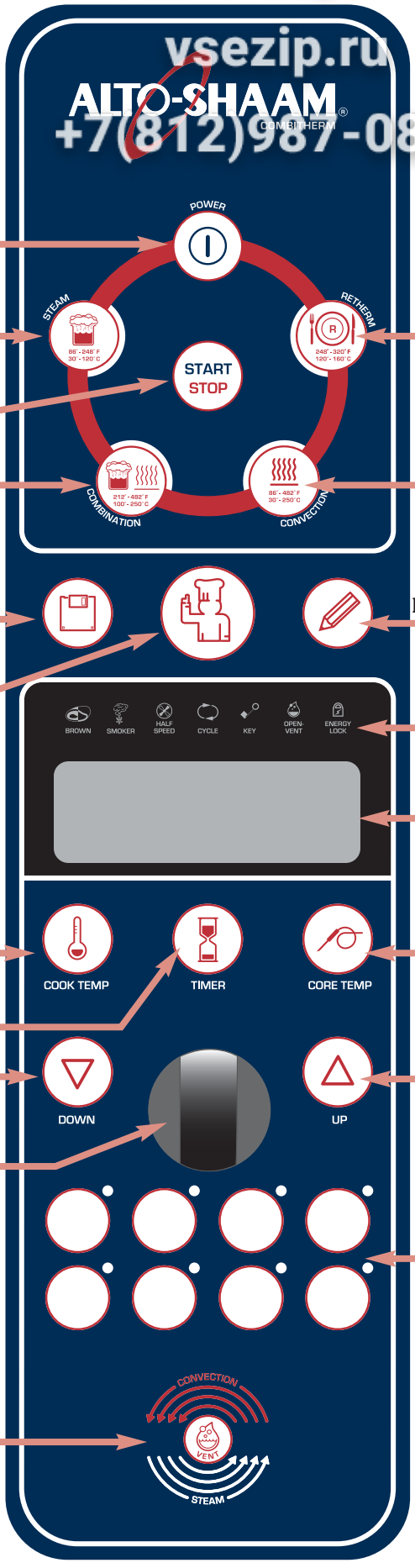

1. POWER ON/OFF KEY
2. STEAM MODE KEY
3. START/STOP KEY
4. COMBINATION MODE KEY
5. PROGRAMMED MENU KEY
   DELUXE MODELS ONLY
6. CHEF FUNCTION KEY
7. COOKING TEMPERATURE KEY
8. TIME KEY
9. DOWN ARROW KEY
10. ADJUSTMENT KNOB
11. MOISTURE VENT KEY
    ELECTRIC MODELS ONLY
12. RETHERM MODE KEY
13. CONVECTION MODE KEY
14. PROGRAM INSTALL/EDIT KEY
    DELUXE MODELS ONLY
15. FUNCTION & OPERATING INDICATORS
16. CONTROL PANEL DISPLAY
17. CORE TEMPERATURE KEY
18. UP ARROW KEY
19. RAPID-TOUCH KEYS
    DELUXE MODELS ONLY

STANDARD & DELUXE CONTROL PANEL BASIC FUNCTION

Зип Общежитие
vsezip.ru
+7(812)987-08-81

① POWER ON/OFF KEY

Activates power to the oven and automatically fills the steam generator equipped models with water that will heat to a stand-by mode temperature of 188°F (87°C). The steam generator flush is also activated by pressing this key.

② STEAM MODE KEY

The oven will operate in the steam mode at a temperature range of 86°F to 248°F (30°C to 120°C).

- Automatic steaming at 212°F (100°C) ***FACTORY-SET DEFAULT***.
- Quick steaming between 213°F and 248°F (101°C and 120°C).
- Low Temperature Steaming between 86°F and 211°F (30°C and 99°C).

③ START/STOP KEY

Initiates all cooking mode functions and programmed procedures stored in memory. Stops an activated cooking mode or programmed procedure currently in progress, and exits the Chef function key ⑥.

④ COMBINATION MODE KEY

Selection key for cooking with a combination of steam and convection heat that can be set within a temperature range of 212°F to 482°F (100°C to 250°C).

⑤ PROGRAMMED MENU KEY

Used to access and exit a menu list of all stored cooking programs that can be reviewed in display ⑯. ***DELUXE MODELS ONLY***

⑥ CHEF FUNCTION KEY

Used to select programmed menu functions, various auxiliary functions, and several chef help instructions.

⑦ COOKING TEMPERATURE KEY

Used to set the required cooking temperature, to recall the set cooking temperature, or to check the actual oven temperature in conjunction with the down arrow key ⑨, the up arrow key ⑱ or the adjustment knob ⑩.

⑧ TIME KEY

Used to set the required cooking time or recall the set cooking time in conjunction with the down arrow key ⑨, the up arrow key ⑱, or the adjustment knob ⑩.

⑨ DOWN ARROW KEY

Used to decrease displayed cook temperature ⑦, time ⑧, or core temperature ⑰ and as a scrolling key for programming functions.

⑩ ADJUSTMENT KNOB

Displays oven functions. Serves the same function as the up and down arrow keys to increase or decrease the displayed cook temperature ⑦, time ⑧, or core temperature ⑰.

⑪ MOISTURE VENT KEY *ELECTRIC MODELS ONLY*

Immediately vents steam and condensate from the oven compartment while cooking in the Convection mode ⑬ or in the Combination mode ④.

⑫ RETHERM MODE KEY

Food rethermalization or reheating mode will operate with automatic steam injection at a temperature range of 248°F to 320°F (120°C to 160°C).

⑬ CONVECTION MODE KEY

Selection key for convection cooking without steam at a temperature range of 86°F to 482°F (30°C to 250°C).

⑭ PROGRAM INSTALL AND EDIT KEY

Used to create, change, duplicate, and delete programmed menus. ***DELUXE MODELS ONLY***.

⑯ CONTROL PANEL DISPLAY

⑰ CORE TEMPERATURE KEY

Used to set the required internal product temperature, to recall the internal product temperature set by the operator, or to display the current internal temperature of the product in conjunction with the down arrow key ⑨, the up arrow key ⑱, or the adjustment knob ⑩.

⑱ UP ARROW KEY

Used to increase displayed cook temperature ⑦, time ⑧, or core temperature ⑰ and as a scrolling key for programming functions.

⑲ RAPID-TOUCH KEYS *DELUXE MODELS ONLY*.

One-touch cooking for immediate access to frequently used operator set programs including cooking modes, cleaning, and other oven functions.

CONTINUED

Зип Общепит
vsezip.ru
+7(812)987-08-81

⑮ FUNCTION & OPERATING INDICATORS

A. GOLD-N-BROWN FEATURE
This indicator will illuminate when the browning function is set by the operator in a timed or programmed cooking cycle in either convection mode or combination mode.

B. COMBI SMOKER (ON EQUIPPED MODELS)
This indicator will illuminate when the smoking function is set by the operator in a timer, probe or programmed cooking cycle in either convection mode or combination mode.

C. REDUCED FAN SPEED
This indicator will illuminate whenever the operator sets a reduced fan speed to protect products affected by high-velocity air movement.

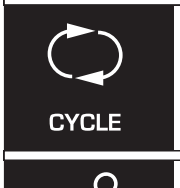

D. CONFIRMATION OF OVEN OPERATION
This indicator illuminates whenever the oven is operating in any mode.

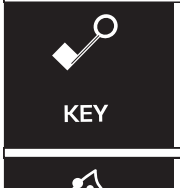

E. KEY LOCK
This indicator will illuminate when operator has locked any mode key or function to prevent unauthorized or accidental changes.

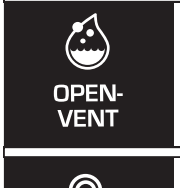

F. MOISTURE VENT
This indicator will illuminate whenever the Moisture Vent Key ⑪ is pressed by the operator to eliminate excessive moisture.

G. ENERGY LOCK
FOR USE WITH OVENS INSTALLED UNDER AN ALTO-SHAAM VENTLESS HOOD.
This indicator is a safety feature that will illuminate and prevent the oven from being operated unless the ventless oven hood is operating.

Зип Общепит
+7(812)987-08-81

SET UP MENU

Following installation, the control should be set with the date and time. In addition to the date and time, the set-up function provides the operator with the ability to adjust a number of other Combitherm operating conditions to conform with the needs of the individual installation.

PRESS THE ON/OFF POWER KEY TO THE *ON* POSITION.

PRESS THE CHEF FUNCTION KEY.

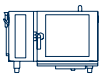

Rotate the adjustment knob until the set up symbol is highlighted within the display.

PRESS THE CHEF FUNCTION KEY.

Press the up △ and down ▽ arrow keys or rotate the adjustment knob to select "YES" for the set up function.

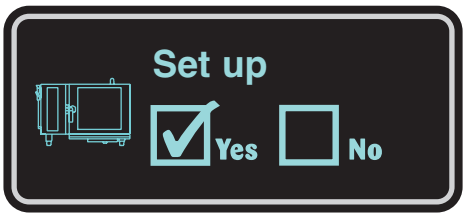

PRESS THE CHEF FUNCTION KEY TO CONFIRM THE SET UP FUNCTION.

Press the up △ and down ▽ arrow keys or rotate the adjustment knob to highlight one of the following adjustment functions:

SET UP ADJUSTMENT CHOICES

- SIGNAL TONE
- VOLUME
- TIME
- DATE
- PROGRAM INDEX
- DEFAULT/MEMO SETTINGS
- TEMPERATURE DISPLAY
- NETWORK ADDRESS
- LANGUAGE

SIGNAL TONE

Rotate the adjustment knob until the signal tone symbol is highlighted within the display.

PRESS THE CHEF FUNCTION KEY TO CONFIRM THE SIGNAL TONE SELECTION.

Press the up △ and down ▽ arrow keys or rotate the adjustment knob to select each tone offered. Stop rotation at each individual setting to hear an audio playback. Select the tone desired.

PRESS THE CHEF FUNCTION KEY TO CONFIRM THE SELECTED SIGNAL TONE SETTING.

SET-UP PROCEDURES

ALWAYS BEGIN SET UP ADJUSTMENTS FROM THE SET UP MENU .

Зип Общепит
vsezip.ru
+7(812)987-08-81

VOLUME

Rotate the adjustment knob until the volume symbol is highlighted within the display.

PRESS THE CHEF FUNCTION KEY TO CONFIRM THE VOLUME SELECTION.

Press the up △ and down ▽ arrow keys or rotate the adjustment knob to select each volume level offered. Stop rotation at each individual setting to hear an audio playback. Select the volume desired with consideration of the noise level within the kitchen during peak production periods.

PRESS THE CHEF FUNCTION KEY TO CONFIRM THE VOLUME SETTING.

TIME

Rotate the adjustment knob until the time symbol is highlighted within the display.

PRESS THE CHEF FUNCTION KEY TO CONFIRM THE TIME SELECTION.

Press the up △ and down ▽ arrow keys to alternate between hours and minutes and rotate the adjustment knob in each to adjust the numbers to the correct time.

PRESS THE CHEF FUNCTION KEY TO CONFIRM THE SET TIME.

DATE

Rotate the adjustment knob until the date symbol is highlighted within the display.

PRESS THE CHEF FUNCTION KEY TO CONFIRM THE DATE SELECTION.

Rotate the adjustment knob to select the preferred date format.

Press the up △ and down ▽ arrow keys to alternate between day, month and year, and rotate the adjustment knob in each to adjust the numbers to the correct settings.

PRESS THE CHEF FUNCTION KEY TO CONFIRM THE SET DATE.

PROGRAM INDEX

Rotate the adjustment knob until the program index symbol is highlighted within the display.

PRESS THE CHEF FUNCTION KEY TO CONFIRM THE PROGRAM INDEX SELECTION.

Press the up △ and down ▽ arrow keys or rotate the adjustment knob to select the preferred index format:
"YES" for a listing of programs entered alphabetically with the program install/edit key.
"NO" for a listing of programs entered numerically with the program install/edit key.

PRESS THE CHEF FUNCTION KEY TO CONFIRM THE PROGRAM INDEX SETTING.

SET-UP PROCEDURES

Зип Общепит
vsezip.ru
+7(812)987-08-81

ALWAYS BEGIN SET UP ADJUSTMENTS FROM THE SET UP MENU .

DEFAULT/MEMO SETTING

The default/memo setting allows the operator to choose between a display showing the factory set defaults for time and temperature or the last operator set values for time and temperature in each cooking mode. This adjustment function also allows the operator to change the defaults from those set at the factory to settings that better meet the needs of the individual operation.

Cooking product with operator set defaults for time and temperature can help reduce operator error. Cooking with the oven in the memo setting is particularly useful when several batches are cooked in succession. The memo setting eliminates the necessity to set time and temperature for each batch.

Rotate the adjustment knob until the default/memo symbol (Auto Memo) is highlighted within the display.

PRESS THE CHEF FUNCTION KEY TO CONFIRM THE DEFAULT/MEMO SELECTION.

Rotate the adjustment knob to ***"NO"*** for memo. This setting will display the last operator set values for time and temperature in each cooking mode.

PRESS THE CHEF FUNCTION KEY TO CONFIRM THE MEMO SETTING.

TO CHANGE THE DEFAULT SETTINGS

Rotate the adjustment knob to select ***"YES"***.

A numbered list of default descriptions will appear in the display. Rotate the adjustment knob until the setting to be changed is highlighted. Press the up △ arrow key to highlight the time or temperature to be changed. Rotate the adjustment knob to change the default to the setting desired. Press the down ▽ arrow key to save the new default setting.

PRESS THE CHEF FUNCTION KEY TO CONFIRM THE NEW DEFAULT SETTINGS.

COMBITHERM FACTORY SET DEFAULT SETTINGS

COOKING MODE	OVEN TEMPERATURE	CORE TEMPERATURE	COOKING TIME
STEAM MODE	212°F (100°C)	158°F (70°C)	25 MINUTES
COMBINATION STEAM MODE	302°F (150°C)	158°F (70°C)	70 MINUTES
CONVECTION MODE	338°F (170°C)	158°F (70°C)	30 MINUTES
RETHERM MODE	275°F (135°C)	158°F (70°C)	5 MINUTES
DELTA-T MODE	122°F (50°C)	172°F (77°C)	FREE
PREHEAT MODE	374°F (140°C)	FREE	—

SET-UP PROCEDURES

ALWAYS BEGIN SET UP ADJUSTMENTS FROM THE SET UP MENU.

Зип Общепит
vsezip.ru
+7(812)987-08-81

TEMPERATURE DISPLAY

Rotate the adjustment knob until the temperature display symbol °C/F is highlighted within the display.

PRESS THE CHEF FUNCTION KEY TO CONFIRM THE TEMPERATURE DISPLAY SELECTION.

Press the up △ and down ▽ arrow keys or rotate the adjustment knob to select either Fahrenheit or Celsius.

PRESS THE CHEF FUNCTION KEY TO CONFIRM THE TEMPERATURE DISPLAY SETTING.

NETWORK ADDRESS

Press the up △ and down ▽ arrow keys or rotate the adjustment knob until the network address symbol is highlighted within the display.

PRESS THE CHEF FUNCTION KEY TO CONFIRM THE NETWORK ADDRESS SELECTION.

The current network address will appear in the display.

Rotate the adjustment knob to select 1 through 99 and assign a different network number for each PC to be connected.

PRESS THE CHEF FUNCTION KEY TO CONFIRM EACH NETWORK ADDRESS.

LANGUAGE

Press the up △ and down ▽ arrow keys or rotate the adjustment knob until the language symbol is highlighted within the display.

PRESS THE CHEF FUNCTION KEY TO CONFIRM THE LANGUAGE PROGRAM SELECTION.

Rotate the adjustment knob to select the required language.

CHINESE	***ITALIAN***	***RUSSIAN***
DUTCH	***JAPANESE***	***SPANISH***
ENGLISH*	***KOREAN***	***SWEDISH***
FRENCH	***POLISH***	
GERMAN	***PORTUGUESE***	

*U.S. FACTORY SETTING

NOTE: SOME OF THE LANGUAGE SELECTIONS SHOWN ABOVE MAY NOT BE AVAILABLE ON ALL MODELS.

PRESS THE CHEF FUNCTION KEY TO CONFIRM THE LANGUAGE SETTING.

IMPORTANT SAFETY PRECAUTIONS

Зип Общепит
vsezip.ru
+7(812)987-08-81

NOTE: Automatic steam venting is a standard safety feature built into all Combitherm oven models. This feature vents all steam from the oven compartment IMMEDIATELY BEFORE COOKING TIME EXPIRES.

This function is provided in all programmed and timed production when operating in any Steam, Combination, Convection, and Retherm cooking mode. Automatic steam venting does not function if the oven door is opened before time expires or when the oven has been set to continuous operation.

⚠ WARNING

HOT STEAM CAUSES BURNS

ROTATE THE DOOR HANDLE TO THE FIRST OPEN ROTATION POSITION ***ONLY***. WAIT UNTIL THE STEAM IS VENTED BEFORE FULLY OPENING THE DOOR.

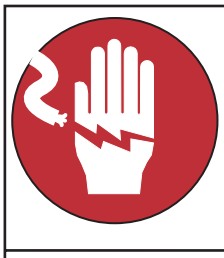

⚠ DANGER

AT NO TIME SHOULD THE INTERIOR OR EXTERIOR BE STEAM CLEANED, HOSED DOWN, OR FLOODED WITH WATER OR LIQUID SOLUTION OF ANY KIND. DO NOT USE WATER JET TO CLEAN.

SEVERE DAMAGE OR ELECTRICAL HAZARD COULD RESULT.

WARRANTY BECOMES VOID IF APPLIANCE IS FLOODED.

⚠ CAUTION

DO NOT USE THE ATTACHED HAND-HELD HOSE TO SPRAY ANYTHING OTHER THAN THE INTERIOR OF THE COMBITHERM OVEN COMPARTMENT.

DO NOT USE THE SPRAY HOSE ON THE SURFACE OF A HOT COOKING COMPARTMENT. ALLOW THE OVEN TO COOL TO A MINIMUM OF 150°F (66°C).

⚠ WARNING

DO NOT HANDLE PANS CONTAINING LIQUID OR SEMILIQUID PRODUCTS POSITIONED ABOVE THE EYE LEVEL OF THE OPERATOR. SUCH PRODUCTS CAN SCALD AND CAUSE SERIOUS INJURY.

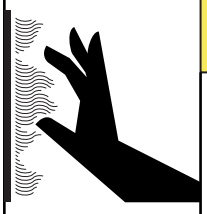

⚠ CAUTION

METAL PARTS OF THIS EQUIPMENT BECOME EXTREMELY HOT WHEN IN OPERATION. TO AVOID BURNS, ALWAYS USE HAND PROTECTION WHEN OPERATING THIS APPLIANCE.

NOTE: USE AUTHORIZED COMBITHERM OVEN CLEANER ONLY.

UNAUTHORIZED CLEANING AGENTS MAY DISCOLOR OR HARM INTERIOR SURFACES OF THE OVEN. READ AND UNDERSTAND LABEL AND MATERIAL SAFETY DATA SHEET BEFORE USING THE OVEN CLEANER.

FOR OPERATOR SAFETY

NOTE AND OBSERVE ALL SAFETY PRECAUTIONS LOCATED THROUGHOUT THIS GUIDE.

STEAM MODE

STEAM ● LOW TEMPERATURE STEAM ● QUICK STEAM

3ин06щекит
vsezip.ru
+7(812)987-08-81

86° - 248° F
30° - 120° C

The Steam mode provides the operator with the ability to steam, poach, or blanch. This mode will automatically steam at the boiling point of water; quick-steam above the boiling point for faster cooking results; or low temperature steam, below the boiling point, for more delicate products such as pâté, mousse, seafood, or custard.

PRESS THE ON/OFF POWER KEY TO THE ON POSITION.

PRESS THE STEAM MODE KEY.

Automatic Steam temperature of 212°F (100°C) will appear in the display.
The last set time or oven control default setting for time will appear in the display.

START STOP **PRESS THE START KEY TO STEAM AT THE SETTINGS SHOWN.**

TO CHANGE THE SETTINGS SHOWN:

PRESS THE TEMPERATURE KEY.

The cooking temperature will appear highlighted within the oven display.

Press the up △ and down ▽ arrow keys or rotate the adjustment knob to select the desired cooking temperature.

- Automatic Steaming 212°F (100°C)
- Quick-steaming 213°F to 248°F (101°C to 120°C)
- Low Temperature Steaming 86°F to 211°F (30°C to 99°C)

TO COOK BY TIME:

PRESS THE TIME KEY.

The cooking time will appear highlighted within the oven display.

Press the up △ and down ▽ arrow keys or rotate the adjustment knob to select the time desired...

or

Set control for continuous operation by rotating the adjustment knob to the right until appears in the display.

TO COOK BY INTERNAL PRODUCT TEMPERATURE:

PRESS THE CORE TEMP KEY.

The previously set core temperature or oven control default setting will appear highlighted within the oven display.

Press the up △ and down ▽ arrow keys or rotate the adjustment knob to select the internal temperature desired and insert the product probe.

START STOP **PRESS THE START KEY TO BEGIN COOKING IN THE STEAM MODE.**

- The set cooking temperature will appear in the display. To adjust the set temperature, press the key once and make corrections as required. To display the actual oven temperature, press the key twice.
- The remaining cooking time will appear in the display. To display the set time or to change the set values for time during operation, press the time key once and make corrections as required.
- The actual internal product temperature will appear in the display. To display the set internal product temperature or to change the set values for core temperature during operation, press the key once and make corrections as required.

When the cooking time has expired or the operator set internal temperature has been reached, a buzzer will sound indicating the end of the operating mode.

- To stop the buzzer, press the start/stop key START STOP or open the oven door.

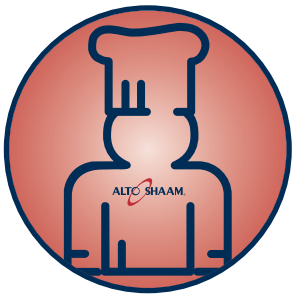

STEAM MODE
CHEF OPERATING TIPS

Зип Общество
vsezip.ru
+7(812)987-08-81

This mode will steam a full or partial load of a single product, or multiple products without transfer of flavors. When steaming multiple products, however, individual product cooking times must be taken into consideration. The non-pressurized atmosphere of the Combitherm also provides the ability to open the door during the steam mode in order to monitor products more closely throughout the steaming process.

STEAM

Perforated, 2-1/2" deep pans (65mm) are particularly suitable for use in this program mode. These pans will provide a shorter cooking time and will prevent product over-cooking at the bottom of the pan.

Separate ice-encased vegetables before steaming to assure more even cooking.

A variety of products can be steamed at the same time but attention must be paid to the different cooking times required for each food product.

Butter and season vegetables after steaming.

Steam long-grain rice using approximately 1-part rice to approximately 1-1/2-parts water or seasoned liquid.

Steam durum wheat noodles in unperforated pans using 1-part noodles to 5-parts cold water.

QUICK STEAMING

Quick steaming is suitable for hearty, root-type vegetables such as potatoes, legumes, and cabbage.

Quick steaming provides a cooking time which is approximately 10-percent shorter than the regular steam mode temperature of 212°F (100°C).

Set the steam cooking temperature between 221°F (105°C) and 230°F (110°C) for small loads and between 230°F (110°C) and 248°F (120°C) for full loads.

LOW TEMP STEAM

The low temperature steam mode will function whenever the oven compartment temperature is below 212°F (100°C).

Proof yeast dough at a temperature setting of 90°F to 110°F (32°C to 43°C).

It will take longer to steam products using the low temperature steam mode.

Steaming sausages in low temperature steam prevents cracked or peeling skins.

Use low temperature steam for delicate foods such as shrimp, fish, seafood, and crème caramel.

For best results, low temperature steam all delicate food items at a temperature of 210°F (99°C) or below.

COMBINATION MODE

The Combination mode will prove to be the most versatile and widely used mode the Combitherm oven has to offer. It will produce the best possible results on the widest variety of products — all within the shortest period of time. The unique control function of this mode enables the operator to roast or bake with a combination of steam and convection heat. In addition to shorter cooking times, this combination of steam and heat offers less product shrinkage and more moisture retention than obtained in a standard convection oven.

Зип Общепит
vsezip.ru
+7(812)987-08-81

PRESS THE ON/OFF POWER KEY TO THE *ON* POSITION.

PRESS THE COMBINATION MODE KEY.

The last set values or oven control default setting for temperature will appear in the display.
The last set time or oven control default setting for time will appear in the display.

START STOP **PRESS THE START KEY TO COOK AT THE SETTINGS SHOWN.**

TO CHANGE THE SETTINGS SHOWN:

PRESS THE TEMPERATURE KEY.

The cooking temperature will appear highlighted within the oven display.

Press the up △ and down ▽ arrow keys or rotate the adjustment knob to select the desired cooking temperature.

- 212°F to 482°F (100°C to 250°C)

TO COOK BY TIME:

PRESS THE TIME KEY.

The cooking time will appear highlighted within the oven display.

Press the up △ and down ▽ arrow keys or rotate the adjustment knob to select the time desired...

or

Set control for continuous operation by rotating the adjustment knob to the right until ∞ appears in the display.

TO COOK BY INTERNAL PRODUCT TEMPERATURE:

PRESS THE CORE TEMP KEY.

The core temperature will appear highlighted within the oven display.

Press the up △ and down ▽ arrow keys or rotate the adjustment knob to select the internal temperature desired and insert the product probe.

START STOP **PRESS THE START KEY TO BEGIN COOKING IN THE COMBINATION MODE.**

- The set cooking temperature will appear in the display. To adjust the set temperature, press the key once and make corrections as required. To display the actual oven temperature, press the key twice.
- The remaining cooking time will appear in the display. To display the set time or to change the set values for time during operation, press the time key once and make corrections as required.
- The actual internal product temperature will appear in the display. To display the set internal product temperature or to change the set values for core temperature during operation, press the key once and make corrections as required.

When the cooking time has expired or the operator set internal temperature has been reached, a buzzer will sound indicating the end of the operating mode.

- To stop the buzzer, press the start/stop key or open the oven door.

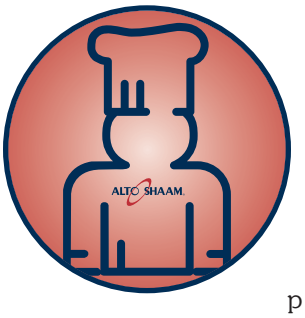

COMBINATION MODE CHEF OPERATING TIPS

Эл Оборудование
vsezip.ru
+7(812)987-08-81

The Combination mode injects the optimum amount of steam automatically. There is no need to select moisture levels. Foods do not dry out. Flavors are retained with no transfer of flavors when mixing product loads.

Due to the automatic steam adjustment, the door can be opened at any time during a cooking operation. Be certain to observe the safety warning when opening the oven door.

The Combination mode is particularly efficient when used for baking, broiling, grilling, stewing, braising, and roasting.

When using the Combination mode, cooking temperatures can be reduced 10- to 20-percent below the temperatures used for conventional cooking methods.

Cooking time will be reduced approximately 40-percent when cooking at the same temperature used for convection oven cooking and up to 50- to 60-percent less time when cooking at the same temperature used for a conventional oven.

Food browning in the Combitherm begins at a cooking temperature of approximately 248°F (120°C).

A higher cooking temperature results in heavier browning but also results in greater product weight loss. To achieve additional browning use the Moisture Vent Key or set Gold-n-Brown into the product procedure. Gold-n-Brown is particularly useful for adding color to high moisture products such as chicken and other poultry items or for additional browning of full loads and other moist products.

The Combination mode provides even browning without the necessity to turn the pans.

For more even cooking, do not cook in pans deeper than 4-inches (100mm).

CONVECTION MODE

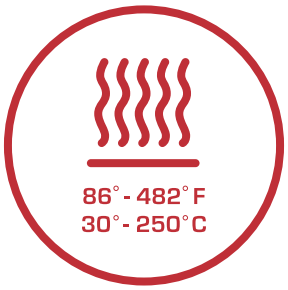

The Convection mode operates with hot circulated air within a temperature range of 86° to 482°F (30° to 250°C). For many applications, better results may be achieved with the Combination mode; therefore, the operator may want to consider using the Convection mode on a more limited basis.

Зип Объединение
vsezip.ru
+7(812)987-08-81

PRESS THE ON/OFF POWER KEY TO THE *ON* POSITION.

PRESS THE CONVECTION MODE KEY.

The last set values or oven control default setting for temperature will appear in the display.
The last set time or oven control default setting for time will appear in the display.

PRESS THE START KEY TO COOK AT THE SETTINGS SHOWN.

TO CHANGE THE SETTINGS SHOWN:

PRESS THE TEMPERATURE KEY.

The cooking temperature will appear highlighted within the oven display.

Press the up △ and down ▽ arrow keys or rotate the adjustment knob to select the desired cooking temperature.
- 86° to 482°F (30° to 250°C)

TO COOK BY TIME:

PRESS THE TIME KEY.

The cooking time will appear highlighted within the oven display.

Press the up △ and down ▽ arrow keys or rotate the adjustment knob to select the time desired...

or

Set control for continuous operation by rotating the adjustment knob to the right until ∞ appears in the display.

TO COOK BY INTERNAL PRODUCT TEMPERATURE:

PRESS THE CORE TEMP KEY.

The core temperature will appear highlighted within the oven display.

Press the up △ and down ▽ arrow keys or rotate the adjustment knob to select the internal temperature desired and insert the product probe.

PRESS THE START KEY TO BEGIN THE COOKING MODE.

- The set cooking temperature will appear in the display. To adjust the set temperature, press the key once and make corrections as required. To display the actual oven temperature, press the key twice.
- The remaining cooking time will appear in the display. To display the set time or to change the set values for time during operation, press the time key once and make corrections as required.
- The actual internal product temperature will appear in the display. To display the set internal product temperature or to change the set values for core temperature during operation, press the key once and make corrections as required.

When the cooking time has expired or the operator set internal temperature has been reached, a buzzer will sound indicating the end of the operating mode.

- To stop the buzzer, press the start/stop key or open the oven door.

To check the length of time the product has been operating in the core temperature mode, press and hold the time key along with the core temperature key. The time period will appear at the top of the display.

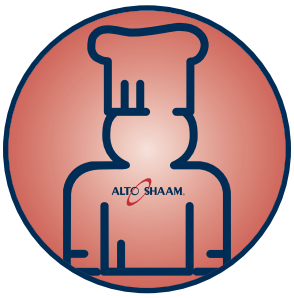

CONVECTION MODE CHEF OPERATING TIPS

Это объявление
vsezip.ru
+7(812)987-08-81

The Convection Mode can be used to roast or bake products needing very short cooking times or for high moisture products such as muffins, cakes, and cookies, or for browning the surface of the product.

The Convection mode works best with foods containing little moisture or for very moist food which require a dryer finished product.

For baking, preheat the Combitherm at a temperature of 36°F to 54°F (20°C to 30°C) above the baking temperature required. Once preheated, reset the temperature as required.

A higher cooking temperature results in heavier browning but also results in greater product weight loss. To achieve additional browning use the Moisture Vent Key or set the Browning Feature into the product procedure.

To prevent the surface of food from excessive drying, the fan will not engage if the internal oven temperature is above 212°F (100°C) and the set oven temperature is below 212°F (100°C).

RETHERM MODE

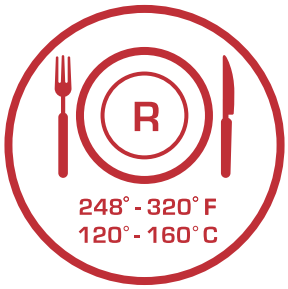

Зип Общепит
vsezip.ru
+7(812)987-08-81

The Retherm mode can be used to retherm alize (regenerate) portioned food on plates, trays, or platters within a short period of time. Steam is automatically injected into the oven compartment as required. Items are brought up to proper serving temperatures without dry edges or condensate forming on the plates.

PRESS THE ON/OFF POWER KEY TO THE ON POSITION.

PRESS THE RETHERM MODE KEY.

The last set values or the default settings will appear in the display.

START STOP **PRESS THE START KEY TO COOK AT THE SETTINGS SHOWN.**

TO CHANGE THE SETTINGS SHOWN:

PRESS THE TEMPERATURE KEY.

The cooking temperature will appear highlighted within the oven display.

Press the up △ and down ▽ arrow keys or rotate the adjustment knob to select the desired cooking temperature.

- 248° to 320°F (120° to 180°C)

TO COOK BY TIME:

PRESS THE TIME KEY.

The cooking time will appear highlighted within the oven display.

Press the up △ and down ▽ arrow keys or rotate the adjustment knob to select the time desired...

or

Set control for continuous operation by rotating the adjustment knob to the right until ∞ appears in the display.

TO COOK BY INTERNAL PRODUCT TEMPERATURE:

PRESS THE CORE TEMP KEY.

The core temperature will appear highlighted within the oven display.

Press the up △ and down ▽ arrow keys or rotate the adjustment knob to select the internal temperature desired and insert the product probe.

START STOP **PRESS THE START KEY TO BEGIN THE RETHERM MODE.**

- The set cooking temperature will appear in the display. To adjust the set temperature, press the key once and make corrections as required. To display the actual oven temperature, press the key twice.
- The remaining cooking time will appear in the display. To display the set time or to change the set values for time during operation, press the time key once and make corrections as required.
- The actual internal product temperature will appear in the display. To display the set internal product temperature or to change the set values for core temperature during operation, press the key once and make corrections as required.

When the cooking time has expired or the operator set internal temperature has been reached, a buzzer will sound indicating the end of the operating mode.

- To stop the buzzer, press the start/stop key or open the oven door.

To check the length of time the product has been operating in the core temperature mode, press and hold the time key along with the core temperature key. The time period will appear at the top of the display.

RETHERM MODE CHEF OPERATING TIPS

Зип Общепит
vsezip.ru
+7(812)987-08-81

Since plated meals consist of dissimilar products, there are several important factors to consider in order to produce the finest results. Product density (compactness), thickness, quantity of product on each plate, and quantity of plates all relate to the length of time necessary to reheat. Again, experience is the best method to determine reheating time. Once the time has been determined and recorded for a specific meal, the results will be consistent for future reheating times.

HELPFUL HINTS FOR REHEATING ON THE PLATE

- ALL FOOD COMPONENTS ON THE PLATE SHOULD BE OF SIMILAR DENSITIES.
- ALL FOOD COMPONENTS ON THE PLATE SHOULD BE SIMILAR IN THICKNESS.
- ARRANGE ALL FOOD COMPONENTS EVENLY ON THE PLATE.
- AVOID EXCESSIVE OVERLAPPING OF PRODUCT.
- SAUCES MUST BE HEATED AND ADDED TO PRODUCT AFTER REHEATING.
- A MIXED VARIETY OF MEALS CAN BE REHEATED AT THE SAME TIME.

• À LA CARTE RETHERMALIZATION

À la carte rethermalization is designed to take a single plate from a refrigerated temperature to serving temperature for immediate service. Plates are prepared in advance, covered, and refrigerated. Preheat the Combitherm oven. Remove plate from refrigeration and place in the oven at 275°F (135°C) for an uncovered plate or 300°F (150°C) for a covered plate. Plates with meat components will take more time than plates containing all vegetable components. Follow internal temperature requirements for reheating and allow for override time. After reheating, remove the plate from the oven, add any sauces, garnish, and serve. This process can be repeated as required.

For the most efficient continuous service, it is suggested that the Combitherm oven be dedicated to the rethermalization process during serving hours.

• BANQUET RETHERMALIZATION

Banquet rethermalization is designed for high volume, full or partial load (multiple plate) reheating. For maximum efficiency, it is essential that volume rethermalization be used in conjunction with the utilization of holding cabinets to keep rethermalized food at proper temperatures.

Plates are assembled in advance, covered, and refrigerated or loaded on the roll-in cart and refrigerated. Preheat the Combitherm oven at 275°F (135°C) for uncovered plates or 300°F (150°C) for covered plates. Remove plates or the roll-in cart from refrigeration, load in the oven and set timer as required. Follow internal temperature requirements for reheating and allow for override time. Remove the plates or roll-in cart from the Combitherm and roll into the companion holding cabinet. Relocate the holding cabinet to the banquet service area.

• RETHERMALIZING PREFABRICATED AND VACUUM-PACKED FROZEN FOODS

For bulk product rethermalization, completely defrost product bags in walk-in cooler. DO NOT REMOVE PRODUCT FROM THE BAG. Load thawed bags in preheated oven and rethermalize in the Low Temperature Steam mode until the required internal temperature is reached. Place rethermalized bags in a preheated holding cabinet set at 140° to 165°F (60° to 74°C) until ready for service.

For large volume on-the-plate regeneration, defrost bags in walk-in cooler. Open bags and plate per menu requirements in a (MAXIMUM) 55°F (13°C) refrigerated room. Cover plates, place on Alto-Shaam roll-in cart (trolley), and roll into Combitherm oven preheated at 275°F (135°C).

Regenerate in the Convection mode for 3 to 5 minutes. Switch to the Retherm mode for an additional 3 minutes or more if required. Transfer full trolley to a preheated holding cabinet set at 160°F (71°C) until ready for service. In the case of meat cooked to rare, set the cabinet at 140°F (60°C).

PLATE COVERS MUST BE USED FOR ON-THE-PLATE REGENERATION.

CORE TEMPERATURE PROBE MODE

Зип Общепит
vsezip.ru
+7(812)987-08-81

As an alternative to timer operation, the Core Temperature Probe mode can be used in conjunction with any program mode to cook by sensing internal product temperature. For a more accurate internal temperature, a specialized Combitherm product probe senses temperature from four strategic points and displays a temperature average.

PRESS THE ON/OFF POWER KEY TO THE *ON* POSITION.

INSERT THE PRODUCT PROBE.
The probe must be inserted so that the tip is positioned in the center of the food mass. For liquid or semiliquid foods, suspend the probe in the center of the product and secure the probe wire to the container edge.

SELECT AND PRESS THE REQUIRED COOKING PROGRAM.

PRESS THE TEMPERATURE KEY.
The cooking temperature will appear highlighted within the oven display.

Press the up △ and down ▽ arrow keys or rotate the adjustment knob to select the desired cooking temperature within the temperature range of the cooking mode selected.

PRESS THE CORE TEMP KEY.
The core temperature will appear highlighted within the oven display.

Press the up △ and down ▽ arrow keys or rotate the adjustment knob to select the internal product cutoff temperature.

PRESS THE START KEY TO BEGIN THE COOKING MODE.

- The actual internal product temperature will appear in the display. To display the set internal product temperature or to change the set values for core temperature during operation, press the key once and make corrections as required.

When the operator set internal temperature has been reached, a buzzer will sound indicating the end of the operating mode.

- To stop the buzzer, press the start/stop key or open the oven door.

To check the length of time the product has been operating in the core temperature mode, press and hold the time key along with the core temperature key. The time period will appear at the top of the display.

CHEF OPERATING TIPS

To prevent over-cooking, remove product from the oven as soon as the required internal temperature is reached in either the Core Temperature mode or the Core Temperature Delta-T mode. The Core Temperature mode should not be used for cooking thin product items.

DO NOT USE THE PROBE WHEN COOKING THIN PRODUCTS.

DELTA-T CORE TEMPERATURE COOKING

Зип Общепит
vsezip.ru
+7(812)987-08-81

This special program function cooks by internal product temperature with the use of the probe. Unlike the standard core temperature mode, however, the Delta-T oven temperature automatically increases in direct proportion to the internal temperature of the product. The Delta-T mode cooks with convection heat but provides a more gentle method of cooking. Browning occurs toward the end of the cooking cycle.

PRESS THE ON/OFF POWER KEY TO THE *ON* POSITION.

PRESS THE CHEF FUNCTION KEY.

Press the up △ and down ▽ arrow keys or rotate the adjustment knob until the Delta-T △T symbol is highlighted in the display.

PRESS THE CHEF FUNCTION KEY.

Press the up △ and down ▽ arrow keys or rotate the adjustment knob to select "YES" for the Delta-T function.

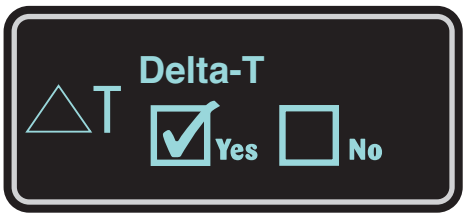

PRESS THE CHEF FUNCTION KEY TO CONFIRM THE SETTING.

PRESS THE TEMPERATURE KEY.

Press the up △ and down ▽ arrow keys or rotate the adjustment knob to select the desired Delta-T cooking temperature within the cooking temperature ranges shown below.

PRESS THE CORE TEMP KEY.

Press the up △ and down ▽ arrow keys or rotate the adjustment knob to select the internal product cutoff temperature within the temperature ranges shown below.

PRODUCT	△T DELTA-T TEMPERATURE △T	CORE TEMPERATURE SETTING
BEEF ROAST	122°F to 131°F (50°C to 55°C)	118°F to 136°F (48°C to 58°C)
TENDERLOIN	122°F to 140°F (50°C to 60°C)	122°F to 140°F (50°C to 60°C)
VEAL & LAMB	122°F to 158°F (50°C to 70°C)	172°F (78°C)
PORK ROAST	122°F to 158°F (50°C to 70°C)	172°F (78°C)
HAM	122°F to 140°F (50°C to 60°C)	172°F (78°C)

THE OVEN WILL BEGIN THE DELTA-T CONVECTION COOKING MODE.

The set Delta-T temperature will appear in the display.
The actual internal product temperature will appear in the display.

When the operator set internal temperature has been reached, a buzzer will sound indicating the end of the operating mode.

• To stop the buzzer, press the start/stop key or open the oven door.

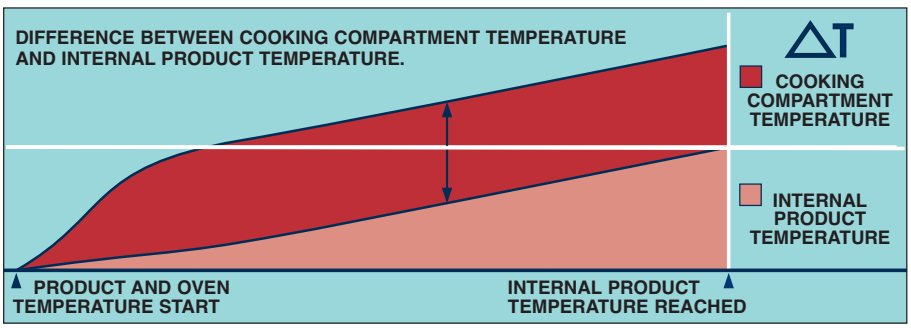

AUXILIARY FUNCTIONS

CHEF FUNCTION KEY

Зип Общепит
vsezip.ru
+7(812)987-08-81

There are several auxiliary functions available through the use of the Chef Function Key. With the exception of the ability to add additional moisture to the oven compartment, that can only be used during the convection mode, all additional functions can be engaged at any time during any cooking mode. Chef Functions can also be programmed into a cooking procedure in oven models that include the deluxe programmable feature. At the end of a cooking mode or program, the oven automatically disengages all operator-set chef functions. These functions, however, do remain programmed and will reengage the next time the programmed procedure is used.

PREHEATING

THE PREHEATING FUNCTION IS ENGAGED IN THE CONVECTION MODE AT A FIXED TEMPERATURE AND TIME. BOTH THE TEMPERATURE AND TIME CAN BE ADJUSTED BY THE OPERATOR TO COMPLY WITH THE REQUIREMENTS OF THE INDIVIDUAL OPERATION.

SEE START UP PROCEDURES UNDER DEFAULT/MEMO SETTING Auto Memo .

PRESS THE CHEF FUNCTION KEY.

Rotate the adjustment knob until the preheat symbol is highlighted in the display.

PRESS THE CHEF FUNCTION KEY.

Press the up △ and down ▽ arrow keys or rotate the adjustment knob to select "YES" for the Preheat function.

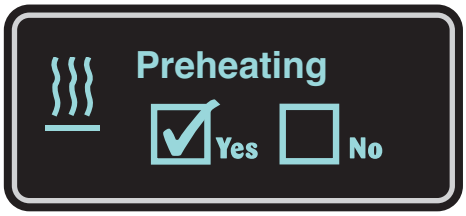

PRESS THE CHEF FUNCTION KEY TO CONFIRM THE SETTING.

THE OVEN WILL BEGIN THE PREHEAT FUNCTION.

- The set preheat temperature will appear in the display.
- The set preheat time will appear in the display.
- The preheat symbol will appear in the display.

When the set time and temperature has been reached, a buzzer will sound indicating the end of the preheat function.

- To stop the buzzer, press the start/stop key or open the oven door.

AUXILIARY FUNCTIONS

Зип Общепит
vsezip.ru
+7(812)987-08-81

CHEF FUNCTION KEY

GOLD-N-BROWN

The browning feature is an automatic function designed to regulate humidity for additional color to products as needed. This feature is particularly useful for adding color to high moisture products such as chicken and other poultry items or for additional browning of full loads and other moist products. In addition, this feature may be used to add texture to fried items such as French fries or breaded chicken. Gold-n-Brown can be used in both the combination mode and the convection mode and can be programmed into a cooking procedure.

Browning can be used for any product with a set cooking time more than 5-minutes. Depending on the type of product and product load, the browning feature may also slightly increase the set cooking time in order to fully complete the browning function. This is a standard operating condition of this feature.

SELECT AND PRESS THE REQUIRED COOKING MODE AND SET MODE FUNCTIONS.

PRESS THE CHEF FUNCTION KEY.

Rotate the adjustment knob until the browning symbol is highlighted within the display.

PRESS THE CHEF FUNCTION KEY.

Press the up △ and down ▽ arrow keys or rotate the adjustment knob to select "YES" for the browning function.

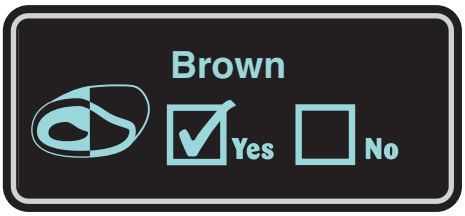

PRESS THE CHEF FUNCTION KEY TO CONFIRM THE SETTING.

The browning indicator light BROWN will illuminate directly above the display.

START STOP **PRESS THE START KEY.**

The oven will engage the browning feature in the Combination or Convection mode set by the operator.

AUXILIARY FUNCTIONS

CHEF FUNCTION KEY

COOL-DOWN FEATURE

The cool-down feature provides the operator with the ability to lower the temperature of the oven compartment at an accelerated pace. This function is useful when it is necessary to immediately change from a high temperature cooking function to a lower temperature function or to the steam program. This function is also useful to help cool the oven compartment in preparation for cleaning.

CHEF OPERATING TIP

When using the cool-down feature in preparation for cleaning, it is important to remember the temperature in the display indicates the air temperature inside the oven compartment and not the interior walls of the oven. Always make certain to allow the oven walls to cool to a minimum of 140°F (60°C) before spraying the compartment with oven cleaner.

PRESS THE CHEF FUNCTION KEY.

Rotate the adjustment knob until the cool-down symbol is highlighted in the display.

PRESS THE CHEF FUNCTION KEY.

Press the up △ and down ▽ arrow keys or rotate the adjustment knob to select "YES" for the cool-down function.

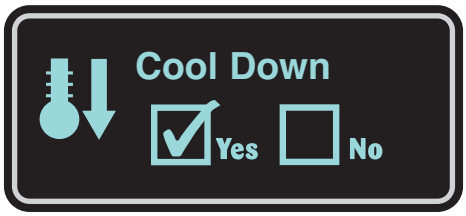

PRESS THE CHEF FUNCTION KEY TO CONFIRM THE SETTING.

OPEN THE OVEN DOOR.

The display will indicate the current temperature of the oven.

ROTATE THE ADJUSTMENT KNOB TO SELECT A COOL-DOWN TEMPERATURE WITHIN A RANGE OF 212°F TO 68°F (100°C TO 20°C). THE FACTORY SET DEFAULT IS 122°F (50°C).

The displayed temperature will continue to decline until it reaches the operator set temperature or factory default temperature if not selected by the operator.

AUXILIARY FUNCTIONS

CHEF FUNCTION KEY

REDUCED FAN SPEED

The reduced fan speed function is useful for flow-sensitive products such as soufflês and meringues, or any products affected by a high velocity of air movement.

SELECT AND PRESS THE REQUIRED COOKING MODE AND SET MODE FUNCTIONS.

PRESS THE CHEF FUNCTION KEY.

Rotate the adjustment knob until the fan symbol is highlighted in the display.

PRESS THE CHEF FUNCTION KEY.

Press the up △ and down ▽ arrow keys or rotate the adjustment knob to select "YES" for the reduced fan speed function.

PRESS THE CHEF FUNCTION KEY TO CONFIRM THE SETTING.

The reduced fan speed indicator light HALF SPEED will illuminate directly above the display.

START STOP **PRESS THE START KEY.**

The oven will start at a reduced fan speed in whatever cooking mode set by the operator.

REDUCED POWER *ELECTRIC MODELS ONLY*

The reduced power function can be used to reduce kitchen power peaks and energy consumption.

SELECT AND PRESS THE REQUIRED COOKING MODE AND SET MODE FUNCTIONS.

PRESS THE CHEF FUNCTION KEY.

Rotate the adjustment knob until the reduced power symbol is highlighted in the display.

PRESS THE CHEF FUNCTION KEY.

Press the up △ and down ▽ arrow keys or rotate the adjustment knob to select "YES" for the reduced power function.

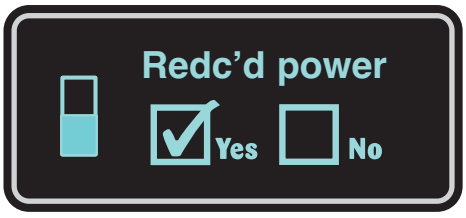

PRESS THE CHEF FUNCTION KEY TO CONFIRM THE SETTING.

START STOP **PRESS THE START KEY.**

The oven will operate with reduced power in whatever cooking mode set by the operator.

REDUCED POWER WILL RESULT IN LONGER COOKING TIMES.

AUXILIARY FUNCTIONS

Зип Общепит
vsezip.ru
+7(812)987-08-81

CHEF FUNCTION KEY

KEY LOCK

Except as noted, all of the mode keys and functions available on the Combitherm can be locked to prevent unauthorized or accidental changes to the settings.

OPERATING ELEMENTS THAT CANNOT BE LOCKED

PRESS THE CHEF FUNCTION KEY.

Rotate the adjustment knob until the key symbol is highlighted within the display.

PRESS THE CHEF FUNCTION KEY.

Press the up △ and down ▽ arrow keys or rotate the adjustment knob to select "YES" for the key lock function.

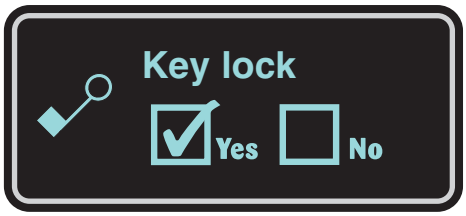

PRESS THE CHEF FUNCTION KEY TO CONFIRM THE SETTING.

The display will indicate PIN 000.

ROTATE THE ADJUSTMENT KNOB TO **PIN 000**.

⇨ PIN 000 is the factory set default to prevent an accidental lock or unlock of the control functions.

PRESS THE CHEF FUNCTION KEY.

THE DISPLAY WILL INDICATE "ALL KEYS UNLOCKED."

SELECT AND PRESS THE FIRST CONTROL FUNCTION TO BE LOCKED.

The display will indicate "LOCK."

If the wrong key has been selected and locked in error, press the same control key again and "UNLOCK" will appear in the display.

Continue in this manner until all desired control functions are locked.

PRESS THE START KEY TO CONFIRM THE LOCKING FUNCTION.

KEY

Whenever any control function has been locked, the key lock symbol will be illuminated within the display.

Whenever any locked control function is pressed, the key lock symbol will flash and an audible signal will sound.

KEY UNLOCK

FOLLOW THE SAME PROCEDURE AS ABOVE UNTIL THE DISPLAY INDICATES **"ALL KEYS UNLOCKED."**

To unlock the Chef Function key.

PRESS THE POWER KEY TO TURN THE OVEN *OFF*.

PRESS THE CHEF FUNCTION KEY

ROTATE THE ADJUSTMENT KNOB TO **PIN 000** TO DISENGAGE ALL LOCK FUNCTIONS.

PRESS THE CHEF FUNCTION KEY. **THE DISPLAY WILL INDICATE "ALL KEYS UNLOCKED."**

Зип Общепит
vsezip.ru
+7(812)987-08-81

CHEF FUNCTION KEY

STEAM INJECTION

Additional steam can be added to the cooking compartment at any time when cooking in the convection mode.

PRESS THE CHEF FUNCTION KEY.

Rotate the adjustment knob until the steam injection symbol is highlighted within the display.

PRESS THE CHEF FUNCTION KEY.

Press the up △ and down ▽ arrow keys or rotate the adjustment knob to select "YES" for the steam injection function.

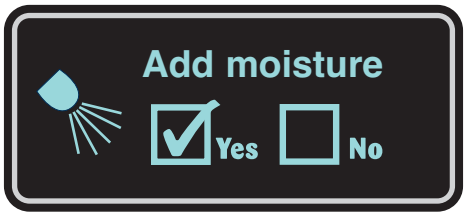

PRESS THE CHEF FUNCTION KEY TO ACTIVATE THE STEAM INJECTION FUNCTION.

Additional steam is injected into the oven compartment for a time period of approximately 15 seconds.

NOTE: Steam injection cannot be programmed through the control keypad, but can be programmed through optional Kitchen Management software.

AUXILIARY FUNCTIONS

Зип Общепит
vsezip.ru
+7(812)987-08-81

GENERAL SMOKER OPERATION

SMOKING FUNCTION

ON EQUIPPED MODELS

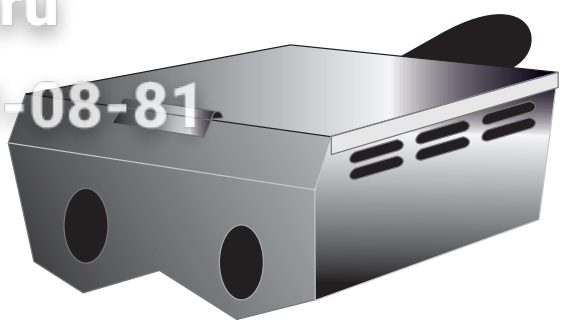

LOAD WOOD CHIPS.

- Measure one container full of dry wood chips.
- Soak dry chips in water for 5 minutes.
- Shake excess water off wood chips.
- Place moistened chips back into the container and position the container securely on the two prongs located on the interior back panel of the oven.

A full container of wood chips will produce smoke for an approximate period of one to two hours depending on the cooking temperature being used for the selected product. The tested procedures in this manual for many of the products that are appropriate for smoking provide complete product smoke penetration and full smoke flavor.

AVAILABLE FROM ALTO-SHAAM		
WOOD CHIPS	**20 POUND BULK PACKS**	
THE TOTAL WEIGHT OF WOOD CHIP BULK PACKS MAY VARY DUE TO HIGH MOISTURE CONTENT WHEN PACKAGED.	APPLE	WC-22543
	HICKORY	WC-2829
	CHERRY	WC-22541
	SUGAR MAPLE	WC-22545

CHEF OPERATING TIP

Products such as ribs that require heavier smoke penetration to reach full smoke flavor should remain in the oven after cooking has been completed. Do not open the oven door. Set the oven in the Low Temperature Steam Mode at 140° to 160°F (60° to 71°C) and allow the product to remain in the oven for a period of one hour.

If you would like assistance, you are invited to contact an Alto-Shaam corporate chef for recommendations.

NOTE: Always keep the OVEN DOOR CLOSED whenever operating the smoking function.

The Combitherm Smoker can be operated without using the smoking function. After using the oven as a smoker, however, it is necessary to clean the oven in order to prevent a transfer of smoke flavor to non-smoked products. Cleaning instructions are provided in this manual.

CAUTION

DO NOT OPEN THE OVEN DOOR DURING THE SMOKING FUNCTION. The introduction of outside air in the oven compartment may cause the wood chips to flame.

WARNING

THE USE OF IMPROPER MATERIALS FOR THE SMOKING FUNCTION COULD RESULT IN DAMAGE, HAZARD, EQUIPMENT FAILURE, OR COULD REDUCE THE OVERALL LIFE OF THE OVEN.

DO NOT USE SAWDUST FOR SMOKING.
DO NOT USE WOOD CHIPS SMALLER THAN THUMBNAIL SIZE.

AUXILIARY FUNCTIONS

Зип Общепит
vsezip.ru
+7(812)987-08-81

CHEF FUNCTION KEY

SMOKER FEATURE

ON EQUIPPED MODELS U.S. PAT. 7,157,668

The ability to smoke product, hot or cold, is offered on all boiler-free electric models and on all gas models with the exception of the 10•20ESGAS, the 12•18ESGAS, and the 20•20ESGAS. The smoking function can be engaged in either the Combination mode or the Convection mode of operation. The smoking function cannot be operated when the oven is operating in the steam mode or the retherm mode.

SELECT AND PRESS THE REQUIRED COOKING MODE (CONVECTION OR COMBINATION).

TO SET COOK TEMPERATURE:

PRESS THE TEMPERATURE KEY.

The cooking temperature will appear highlighted within the oven display.

Press the up △ and down ▽ arrow keys or rotate the adjustment knob to select the desired cooking temperature.

TO SET COOK TIME:

PRESS THE TIME KEY.

The cooking time will appear highlighted within the oven display.

Press the up △ and down ▽ arrow keys or rotate the adjustment knob to select the time desired.

or

Set control for continuous operation by rotating the adjustment knob to the right until desired time appears in the display.

TO ACTIVATE SMOKER:

PRESS THE CHEF FUNCTION KEY.

Rotate the adjustment knob until the smoker symbol is highlighted within the display.

PRESS THE CHEF FUNCTION KEY.

Press the up △ and down ▽ arrow keys or rotate the adjustment knob to select "YES" for the Smoker function.

PRESS THE CHEF FUNCTION KEY TO CONFIRM THE SETTING.

PRESS THE START KEY TO ACTIVATE THE SMOKER FUNCTION.

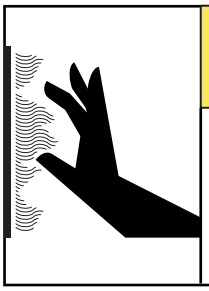

CAUTION

METAL PARTS OF THIS EQUIPMENT BECOME EXTREMELY HOT WHEN IN OPERATION. TO AVOID BURNS, ALWAYS USE HAND PROTECTION WHEN OPERATING THIS APPLIANCE.

AUXILIARY FUNCTIONS

Зип Общепит
vsezip.ru
+7(8172)987-08-81

CHEF FUNCTION KEY

ENERGY LOCK

FOR USE WITH OVENS INSTALLED UNDER A VENTLESS HOOD.

Energy lock is a safety feature to prevent the oven control from being operated unless the ventless oven hood is in operation. The energy lock indicator light will illuminate in the control display if this situation occurs and the oven control will be inoperable until the oven hood is reset and operating.

PRESS THE CHEF FUNCTION KEY.

Rotate the adjustment knob until the energy lock symbol is highlighted within the display.

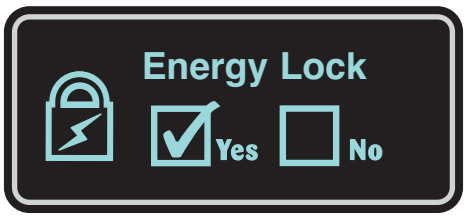

PRESS THE CHEF FUNCTION KEY.

Press the up △ and down ▽ arrow keys or rotate the adjustment knob to select "YES" for the energy lock function.

PRESS THE CHEF FUNCTION KEY TO ACTIVATE THE ENERGY LOCK FUNCTION.

The oven control will not operate when power is engaged until the ventless hood is reset and operating.

Press the "Combi Reset" button on the ventless hood to energize the hood and return the oven control to normal operation.

ENERGY PROTECTION *FURNISHED UPON REQUEST AS A FACTORY INSTALLED OPTION*

In locations where the electric service is regulated with a device installed on site, this function will protect full power to the Combitherm for the duration of the next operator set program or cooking mode. This function cannot be set during an active cooking mode or program. Power interruption may affect all other electric service within the regulated location.

FOR USE ONLY IN THOSE COUNTRIES WHERE THE LOCAL ELECTRIC UTILITY PROVIDES AN ENERGY OPTIMIZATION SYSTEM INSTALLED ON SITE.

PRESS THE CHEF FUNCTION KEY.

Rotate the adjustment knob until the program protection symbol is highlighted within the display.

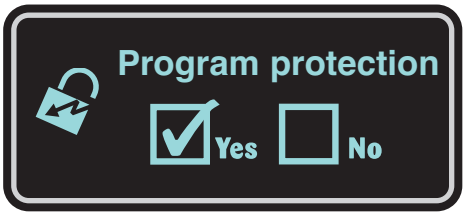

PRESS THE CHEF FUNCTION KEY.

Press the up △ and down ▽ arrow keys or rotate the adjustment knob to select "YES" for the energy protection function.

PRESS THE CHEF FUNCTION KEY TO ACTIVATE THE PROGRAM PROTECTION FUNCTION.

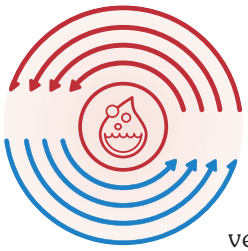

MOISTURE VENT KEY

Зип Общепит
vsezip.ru
+7(812)987-08-81

This function provides the operator with the ability to eliminate excessive moisture from the oven compartment and the exterior surface of the foods being cooked. The moisture vent key is designed to operate in both the Combination mode and in the Convection cooking mode. On deluxe models, this function can also be made part of a cooking program.

PRESS THE MOISTURE VENT KEY TO REDUCE STEAM AND MOISTURE LEVELS IN THE OVEN.

The illuminated, blue portion of the Moisture Vent Key will go out. Open vent

symbol will illuminate within the display.

PRESS THE MOISTURE VENT KEY TO DISENGAGE THE MOISTURE VENT KEY FUNCTION.

The blue portion of the Moisture Vent Key will illuminate. Open vent

symbol within the display will extinguish.

AT THE END OF A COOKING MODE, THE MOISTURE VENT KEY WILL AUTOMATICALLY DISENGAGE.

Зип Общепит
vsezip.ru
+7(812)987-08-81

QUICK PROGRAMMING

This quick programming function provides the operator with the ability to temporarily program a cooking procedure using multiple cooking modes, along with any auxiliary functions desired. Quick programming is particularly useful when cooking several batches of the same product back-to-back and will remain programmed until any new cooking mode key is pressed.

PRESS AND HOLD THE FIRST REQUIRED COOKING MODE FOR A PERIOD OF 3-SECONDS.

01/01 will appear at the top of the display indicating STEP ONE.
The temperature and time will appear directly below 01/01.

PRESS THE TEMPERATURE KEY.

The temperature will become highlighted within the display.

ROTATE THE ADJUSTMENT KNOB TO SELECT THE REQUIRED TEMPERATURE.

PRESS THE TIME KEY OR THE CORE TEMP KEY .

The time or core temperature will become highlighted within the display.

ROTATE THE ADJUSTMENT KNOB TO SELECT THE REQUIRED SETTING.

PRESS AND HOLD THE SECOND REQUIRED COOKING MODE FOR A PERIOD OF 3-SECONDS.

Follow the above directions until all steps have been entered.

PRESS THE START KEY.

The oven will begin cooking as programmed, automatically switching to each cooking mode entered. Each step entered will be indicated in the display as the oven cycles from mode to mode. **EXAMPLE: 01/05 = STEP ONE OF FIVE**
02/05 = STEP TWO OF FIVE

PRESS THE STOP KEY OR OPEN THE OVEN DOOR WHEN THE BUZZER SOUNDS AT THE END OF THE PROGRAM.

THIS PROGRAM WILL REMAIN IN TEMPORARY MEMORY UNTIL ANY NEW COOKING MODE KEY IS PRESSED. QUICK PROGRAMMING CAN BE SAVED AND STORED IN MEMORY ON DELUXE MODELS ONLY.

ADVANCE FEATURES

Зип Общепит
vsezip.ru
+7(812)987-08-81

Auxiliary Functions are made part of the control as an additional convenience to the operator, however, these functions are not necessary for the general operation of the Combitherm oven.

START TIME PRESELECT

Start time preselect provides the operator with the ability to program a fixed start time for oven operation. This function can be operated when cooking in any mode and is offered as a convenience to set an advanced start-up of the preheating function prior to the beginning of the production day. It can also be used for advance start-up for non-refrigerated items such as baked potatoes.

⚠ CAUTION

To prevent food spoilage, this feature is not recommended for use with any raw product that requires temperature maintenance at or under 40°F (4°C).

SELECT AND PRESS THE REQUIRED COOKING MODE.

Set all mode functions such as temperature, time, core temperature, etc. The time entered in the initial operational mode setup will automatically be reflected on the start time preselect display.

PRESS AND HOLD THE TIME KEY WHILE TURNING THE ADJUSTMENT KNOB.

The display will indicate the current programmed settings in 24-hour (military) time.

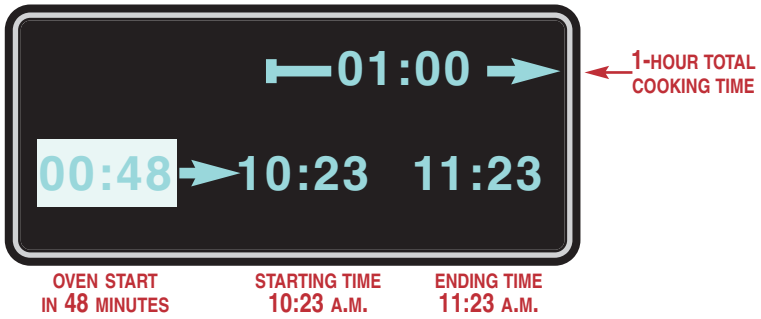

A.M.		P.M.	
1:00	1:00	1:00	13:00
2:00	2:00	2:00	14:00
3:00	3:00	3:00	15:00
4:00	4:00	4:00	16:00
5:00	5:00	5:00	17:00
6:00	6:00	6:00	18:00
7:00	7:00	7:00	19:00
8:00	8:00	8:00	20:00
9:00	9:00	9:00	21:00
10:00	10:00	10:00	22:00
11:00	11:00	11:00	23:00
12:00	12:00	12:00	24:00

The cooking time shown (UPPER RIGHT) indicates automatic oven operation for a period of one hour and appears only when cooking by time as entered in the initial operational mode setup.

TO CHANGE THE STARTING TIME, PRESS AND HOLD THE TIME KEY AND TURN THE ADJUSTMENT KNOB.

Rotate the adjustment knob to select the starting time desired. As the starting time is changed, the countdown for oven start (LEFT) and the ending time will automatically adjust accordingly.

RELEASE THE TIME KEY AFTER THE REQUIRED STARTING TIME HAS BEEN SELECTED.

The oven preselect start time display will immediately begin a countdown and will automatically start the oven when zero is reached.

THIS FUNCTION CAN BE CANCELLED AT ANY TIME BY PRESSING THE START/STOP KEY .

Зип Общепит
vsezip.ru
+7(812)987-08-81

COMBITHERM PROGRAMMING SYMBOLS

RECORD	COPY PROCEDURE	INSERT STEP
SAVE	DELETE PROCEDURE	APPEND STEP
NEW PROCEDURE	EDIT PROCEDURE	DELETE STEP

RECORDING A COOKING PROCEDURE

Recording a cooking procedure provides the operator with the ability to test and verify all set operating parameters for the selected cooking modes and to make any necessary adjustments before saving and storing the procedure into memory.

PRESS THE PROGRAM INSTALL AND EDIT KEY.

Press the up △ and down ▽ arrow keys or rotate the adjustment knob until the record symbol is highlighted in the display.

PRESS THE PROGRAM INSTALL KEY TO CONFIRM THE SELECTION.

The display will indicate **"Recorder ON"** and the record symbol will appear in the display.

SELECT AND PRESS THE ***FIRST*** REQUIRED COOKING MODE.

Set all cooking mode parameters for temperature, time, or internal product temperature plus auxiliary functions, and advanced features for the first step to be recorded.

START STOP PRESS THE START KEY TO BEGIN THE FIRST RECORDED STEP.

When the cooking time has expired or the operator set internal temperature has been reached, a buzzer will sound indicating the end of the operating mode.

- To stop the buzzer, press the start/stop key or open the oven door.

SELECT AND PRESS THE ***SECOND*** REQUIRED COOKING MODE.

Set all cooking mode parameters for temperature, time, or internal product temperature plus auxiliary functions, and advanced features for the second step to be recorded.

START STOP PRESS THE START KEY TO BEGIN THE SECOND RECORDED STEP.

Continue to record cooking modes as indicated for up to 20 steps.

All cooking mode steps entered with **"Recorder ON"** will remain in memory, in the order entered, until the recorder is turned off. Recorded procedures will not be lost or affected by pressing the stop/start key.

Зип Общепит
vsezip.ru
+7(812)987-08-81

TO CANCEL THE RECORDING FUNCTION

WITH THE "Recorder ON" FUNCTION ACTIVATED, PRESS THE PROGRAM INSTALL AND EDIT KEY.

Press the up △ and down ▽ arrow keys or rotate the adjustment knob until the record symbol is highlighted in the display.

PRESS THE PROGRAM INSTALL KEY TO CONFIRM THE SELECTION.

"Recorder OFF" will appear in the display and the oven can be operated normally.

SAVING A RECORDED COOKING PROCEDURE

When the previous cooking mode steps recorded produce satisfactory results, the recorded cooking procedure can be saved in memory for future use.

PRESS THE PROGRAM INSTALL/EDIT KEY.

Press the up △ and down ▽ arrow keys or rotate the adjustment knob until the save symbol is highlighted in the display.

PRESS THE PROGRAM INSTALL/EDIT KEY TO CONFIRM THE SELECTION.

Name the procedure. Rotate the adjustment knob to select the first letter of the procedure name. Press the up △ and down ▽ arrow key to select second letter position and rotate the adjustment knob to select the second letter. Continue this procedure for each subsequent alpha character, number, or symbol required.

PRESS THE PROGRAM INSTALL AND EDIT KEY TO CONFIRM THE PROCEDURE NAME.

The display will indicate the first unoccupied memory location within the programmed menu. If an alternate location is desired, rotate the adjustment knob to highlight another unoccupied, numbered memory location within the programmed menu. If an *occupied* location is selected, the existing procedure will be replaced by the new procedure.

PRESS THE PROGRAM INSTALL/EDIT KEY TO CONFIRM THE PROCEDURE LOCATION.

The display will indicate "please wait" and will return to the main menu display. The procedure has now been saved in the selected location and can be verified by rotating the adjustment knob to the saved procedure.

To review the set operating parameters of any programmed procedure, press the programmed menu key and rotate the adjustment knob until the procedure to be reviewed is highlighted in the display. Press the chef function key. The cooking mode key for the first step will illuminate and the program mode, temperature, time, or core temperature will appear in the display. Rotate the adjustment knob to review each step.

Зип Общепит
+7(812)987-08-81

CREATING A NEW COOKING PROCEDURE

Cooking procedures for items prepared on a regular basis can be stored in memory.

PRESS THE PROGRAM INSTALL/EDIT KEY.

Press the up △ and down ▽ arrow keys or rotate the adjustment knob until the new procedure symbol is highlighted in the display.

PRESS THE PROGRAM INSTALL/EDIT KEY TO CONFIRM THE SELECTION.

All cooking mode keys will begin to flash and 01/01 will appear at the top of the display indicating the first cooking step.

SELECT AND PRESS THE FIRST REQUIRED COOKING MODE.

Set cooking mode functions for temperature and time, or internal core temperature. Add any auxiliary functions along with the moisture venting feature. Follow the basic operating instructions located in this booklet. Auxiliary functions can be added by pressing the chef function key after entering the operating mode parameters for each individual step and pressing the up △ and down ▽ arrow keys or rotating the adjustment knob to select the auxiliary function required. Press the chef function key to confirm the auxiliary function setting(s) for each step.

PRESS THE PROGRAM INSTALL/EDIT KEY TO CONFIRM THE FIRST STEP.

SELECT AND PRESS THE SECOND REQUIRED COOKING MODE.

The display will indicate 02/02 indicating the second cooking mode step. Set all cooking mode functions as indicated above.

PRESS THE PROGRAM INSTALL/EDIT KEY TO CONFIRM THE SECOND STEP.

CONTINUE WITH THE ABOVE INSTRUCTIONS UNTIL ALL MODE STEPS AND FUNCTIONS ARE ENTERED. UP TO 20 COOKING MODE STEPS CAN BE SAVED IN A SINGLE PROCEDURE.

AFTER ALL FUNCTIONS ARE ENTERED,
PRESS THE PROGRAM INSTALL/EDIT KEY TO CONFIRM THE NEW PROCEDURE.

Name the procedure. Rotate the adjustment knob to select the first letter of the procedure name. Press the up △ and down ▽ arrow key to select second letter position and rotate the adjustment knob to select the second letter. Continue for each subsequent alpha character, number, or symbol required.

PRESS THE PROGRAM INSTALL AND EDIT KEY TO CONFIRM THE PROCEDURE NAME.

Rotate the adjustment knob to highlight an unoccupied, numbered memory location within the programmed menu. If an occupied location is selected, the existing procedure will be replaced by the new procedure.

PRESS THE PROGRAM INSTALL AND EDIT KEY TO CONFIRM THE PROGRAM INSTALLATION.

The display will indicate “please wait” and will return to the main menu display.

Зип Общепит
vseziplu
+7(812)987-08-81

START A PROGRAMMED PROCEDURE

PRESS THE PROGRAMMED MENU KEY.

All stored procedures are listed alphabetically or numerically as selected by the operator in the initial oven start up procedures under the program index category.

Rotate the adjustment knob until the required procedure is highlighted in the display.

START STOP PRESS THE START KEY.

To review the set parameters of any programmed procedure, press the programmed menu key and rotate the adjustment knob until the procedure to be reviewed is highlighted in the display. Press the chef function key. The cooking mode, temperature, time, or core temperature will appear in the display.

COPY A PROGRAMMED PROCEDURE

PRESS THE PROGRAMMED MENU KEY.

Rotate the adjustment knob until the procedure to be copied is highlighted in the display.

PRESS THE PROGRAM INSTALL AND EDIT KEY.

Press the up △ and down ▽ arrow keys or rotate the adjustment knob until the procedure symbol is highlighted in the display. copy»

PRESS THE PROGRAM INSTALL AND EDIT KEY.

The display will select an empty, numbered location to insert the duplicate copy.

PRESS THE PROGRAM INSTALL AND EDIT KEY TO CONFIRM THE DUPLICATION.

The display will indicate “please wait” and will return to the main menu display.

An exact duplicate of the selected procedure has been inserted in the new location under the same name as the original procedure. The duplicate can be renamed and edited as required. *See additional editing instructions.*

DELETE A PROGRAMMED PROCEDURE

PRESS THE PROGRAMMED MENU KEY.

Rotate the adjustment knob to highlight the procedure to be deleted.

PRESS THE PROGRAM INSTALL/EDIT KEY.

Press the up △ and down ▽ arrow keys or rotate the adjustment knob until the delete symbol is highlighted in the display.

PRESS THE PROGRAM INSTALL AND EDIT KEY TO CONFIRM THE SELECTION.

The programmed procedure has been deleted from the menu.

Зип Общепит
vsezip.ru
+7(812)987-08-81

PROGRAM EDITING

EDIT A PROGRAMMED PROCEDURE

PRESS THE PROGRAMMED MENU KEY.

Rotate the adjustment knob until the procedure to be edited is highlighted in the display.

PRESS THE PROGRAM INSTALL AND EDIT KEY.

Press the up △ and down ▽ arrow keys or rotate the adjustment knob until the edit symbol is highlighted in the display.

PRESS THE PROGRAM INSTALL AND EDIT KEY TO CONFIRM THE SELECTION.

The display will indicate the procedure name, cooking step number (EXAMPLE: **"01/05" = STEP ONE OF FIVE**), and operating parameters for temperature, time, or internal product temperature.

To change the operating parameters for the first step:
Press the cooking temperature key and rotate the adjustment knob.
Press the time key and rotate the adjustment knob to change the cooking time.
Press the core temperature key and rotate the adjustment knob to change the core temp.

Auxiliary functions can be added by pressing the chef function key after entering the operating mode parameters for each individual step and pressing the up △ and down ▽ arrow keys or rotate the adjustment knob to select the auxiliary function required. Press the chef function key to confirm the auxiliary function setting.

Press the down arrow key for each subsequent step of the procedure and make changes to each step as required.

PRESS THE PROGRAM INSTALL AND EDIT KEY TO CONFIRM THE SETTING.

The display will indicate the same name as the original procedure, minus the last letter. Install the last letter by rotating the adjustment knob to the correct letter.

Rename the procedure by pressing the down arrow key to clear the display.
Press the up △ and down ▽ arrow key to select each individual alpha character, number, or symbol. Rotate the adjustment knob to select each subsequent letter.

PRESS THE PROGRAM INSTALL AND EDIT KEY TO CONFIRM THE NAME.

PRESS THE PROGRAM INSTALL AND EDIT KEY TO INSTALL THE PROGRAM.

To review the set operating parameters of any programmed procedure, press the programmed menu key and rotate the adjustment knob until the procedure to be reviewed is highlighted in the display. Press the chef function key. The cooking mode key for the first step will illuminate and the program mode, temperature, time, or core temperature will appear in the display. Rotate the adjustment knob to review each step.

Зип Общепит
vsezip.ru
+7(812)987-08-81

PROGRAM EDITING

INSERT A PROGRAMMED PROCEDURE STEP

PRESS THE PROGRAMMED MENU KEY.

Rotate the adjustment knob until the procedure to add a new step is highlighted in the display.

PRESS THE PROGRAM INSTALL KEY.

Press the up △ and down ▽ arrow keys or rotate the adjustment knob until the edit procedure symbol is highlighted in the display.

PRESS THE PROGRAM INSTALL AND EDIT KEY TO CONFIRM THE SELECTION.

The display will indicate the procedure name, cooking step number and operating parameters for temperature, time, or internal product temperature.

Press the up △ or down ▽ arrow keys to select the step *immediately following* the position wanted for the new step.

PRESS THE CHEF FUNCTION KEY.

A choice of editing symbols and auxiliary functions will appear in the display. Press the up △ and down ▽ arrow keys or rotate the adjustment knob to select the insert step symbol.

PRESS THE CHEF FUNCTION KEY TO CONFIRM THE SELECTION.

Press the up △ and down ▽ arrow keys or rotate the adjustment knob to select "YES" for step insertion.

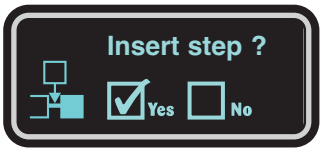

PRESS THE CHEF FUNCTION KEY TO CONFIRM THE SELECTION.

All cooking modes will begin to flash. Select and press the cooking mode to be inserted. Press and set cooking temperature, time, or internal core temperature. Auxiliary functions can be added by pressing the chef function key after entering the operating mode parameters for each individual step and pressing the up △ and down ▽ arrow keys or rotating the adjustment knob to select the auxiliary function required. Press the chef function key to confirm the auxiliary function setting. Add the moisture vent key function if required.

PRESS THE INSTALL/EDIT KEY TO CONFIRM THE SELECTED MODE AND FUNCTIONS.

The display will indicate the procedure name minus the last letter. Reinsert the last letter with the adjustment knob or use the up △ and down ▽ arrow keys in conjunction with the adjustment knob to rename the procedure.

PRESS THE INSTALL/EDIT KEY TO CONFIRM THE NAME.

PRESS THE INSTALL/EDIT KEY TO INSERT THE NEW STEP INTO THE PROCEDURE.

The display will indicate "please wait" and will return to the main menu display.

TO VERIFY THE INSERTED STEP, PRESS THE CHEF FUNCTION KEY WHILE THE ALTERED PROCEDURE IS HIGHLIGHTED. ROTATE THE ADJUSTMENT KNOB TO REVIEW ALL SET PARAMETERS.

PROGRAM EDITING

APPEND A PROGRAMMED PROCEDURE STEP

PRESS THE PROGRAMMED MENU KEY.

Rotate the adjustment knob until the procedure to include a final step is highlighted in the display.

PRESS THE PROGRAM INSTALL KEY.

Press the up △ and down ▽ arrow keys or rotate the adjustment knob until the edit procedure symbol is highlighted in the display.

PRESS THE PROGRAM INSTALL AND EDIT KEY TO CONFIRM THE SELECTION.

The display will indicate the procedure name, cooking step number and operating parameters for temperature, time, or internal product temperature.

Press the up △ or down ▽ arrow keys to select the last step of the procedure.

PRESS THE CHEF FUNCTION KEY.

A choice of editing symbols and auxiliary functions will appear in the display. Press the up △ and down ▽ arrow keys or rotate the adjustment knob to select the append step symbol.

PRESS THE CHEF FUNCTION KEY TO CONFIRM THE SELECTION.

Press the up △ and down ▽ arrow keys or rotate the adjustment knob to select "YES" for append step.

PRESS THE CHEF FUNCTION KEY TO CONFIRM THE SELECTION.

All cooking modes will begin to flash. Select and press the cooking mode to be appended. Press and set cooking temperature, time, or internal core temperature. Auxiliary functions can be added by pressing the chef function key after entering the operating mode parameters for each individual step and pressing the up △ and down ▽ arrow keys or rotating the adjustment knob to select the auxiliary function required. Press the chef function key to confirm the auxiliary function setting. Add the moisture vent key function if required.

PRESS THE INSTALL/EDIT KEY TO CONFIRM THE SELECTED MODE AND FUNCTIONS.

The display will indicate the procedure name minus the last letter. Reinsert the last letter with the adjustment knob or use the up △ and down ▽ arrow keys in conjunction with the adjustment knob to rename the procedure.

PRESS THE INSTALL/EDIT KEY TO CONFIRM THE NAME.

PRESS THE INSTALL/EDIT KEY TO INSERT THE NEW STEP INTO THE PROCEDURE.

The display will indicate "please wait" and will return to the main menu display.

TO VERIFY THE INSERTED STEP, PRESS THE CHEF FUNCTION KEY WHILE THE ALTERED PROCEDURE IS HIGHLIGHTED. ROTATE THE ADJUSTMENT KNOB TO REVIEW ALL SET PARAMETERS.

Зип Общепит
vsezip.ru
+7(812)987-08-81

PROGRAM EDITING

DELETE A PROGRAMMED STEP

PRESS THE PROGRAMMED MENU KEY.

Rotate the adjustment knob to highlight the procedure in which a step is to be deleted.

PRESS THE PROGRAM INSTALL KEY.

Press the up △ and down ▽ arrow keys or rotate the adjustment knob until the edit procedure symbol is highlighted in the display.

PRESS THE PROGRAM INSTALL AND EDIT KEY TO CONFIRM THE SELECTION.

The display will indicate the procedure name, cooking step number and operating parameters for temperature, time, or internal product temperature.

Press the up △ or down ▽ arrow keys to select the step to be deleted.

PRESS THE CHEF FUNCTION KEY.

A choice of editing symbols and auxiliary functions will appear in the display. Press the up △ and down ▽ arrow keys or rotate the adjustment knob to select the delete step symbol.

PRESS THE CHEF FUNCTION KEY TO CONFIRM THE SELECTION.

Press the up △ and down ▽ arrow keys or rotate the adjustment knob to select "YES" for step deletion.

PRESS THE CHEF FUNCTION KEY TO CONFIRM THE SELECTION.

PRESS THE INSTALL/EDIT KEY TO CONFIRM THE DELETION.

The display will indicate the name of the procedure as originally programmed.

PRESS THE INSTALL/EDIT KEY TO CONFIRM THE NAME.

PRESS THE INSTALL/EDIT KEY TO REMOVE THE DELETED STEP FROM THE PROGRAM.

The display will indicate "please wait" and will return to the main menu display.

TO VERIFY THE STEP HAS BEEN DELETED, PRESS THE CHEF FUNCTION KEY WHILE THE DELETE STEP PROCEDURE IS HIGHLIGHTED. ROTATE THE ADJUSTMENT KNOB TO REVIEW ALL SET PARAMETERS.

Зип Общепит
vsezip.ru
+7(812)987-08-81

RAPID-TOUCH™ KEYS

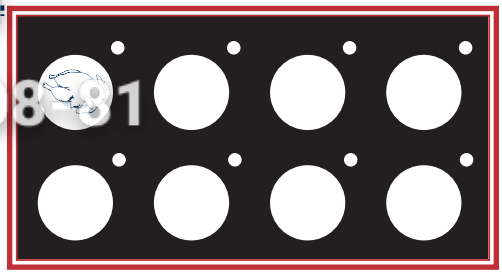

Rapid-Touch programmed quick-keys provide the operator with the ability to assign procedures used on a regular basis to individual keys that can be identified with a picture graphic resembling the product. Various picture graphics are included with the Combitherm oven.

TO ASSIGN A PROCEDURE TO A PROGRAM RAPID-TOUCH KEY

PRESS THE PROGRAMMED MENU KEY.

Rotate the adjustment knob to highlight the procedure to be assigned to Rapid-Touch operation.

PRESS AND HOLD THE SELECTED RAPID TOUCH KEY FOR A PERIOD OF THREE SECONDS.

When the buzzer sounds, the programmed procedure has been assigned to the Rapid-Touch key selected.

Identify the Rapid-Touch key with a corresponding picture graphic.

TO OPERATE A PROCEDURE ON RAPID-TOUCH KEY

PRESS AN ASSIGNED RAPID TOUCH KEY.

The indicator light to the upper right of the selected Rapid-Touch key will illuminate. The oven will begin operating as programmed with the display indicating the name of the procedure, the step number, the total number of steps, and the temperature, time, or internal product temperature.

When the cooking time for all programmed modes has expired or the operator set internal temperature has been reached, a buzzer will sound indicating the completion of the program.

- To stop the buzzer, press the start/stop key or open the oven door.

Once a Rapid-Touch key is programmed with a procedure, care should be taken not to press and hold the programmed key with another procedure highlighted in the display by means of the programmed menu key. The highlighted procedure will override the Rapid-Touch key program and the picture graphic will no longer match the procedure.

S-CONTROL PANEL IDENTIFICATION

Антиобщепит
vsezip.ru
+7(812)987-08-81

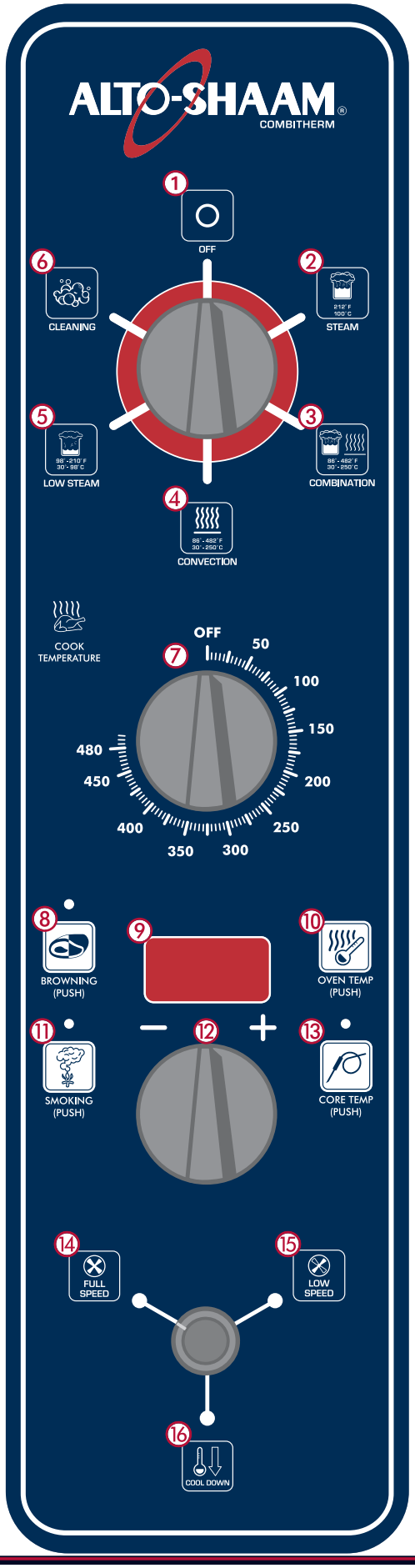

① OFF POSITION

Maintains oven in a stand-by mode.

② STEAM

The oven will operate at a fixed steam temperature of 212° F (100°C).

③ COMBINATION

A combination of steam and convection heat to cook at a temperature between 86°F and 482°F (30°C to 250°C) to be set by the operator.

④ CONVECTION

Convection heat to cook without steam at a temperature between 86°F and 482°F (30°C and 250°C) to be set by the operator.

⑤ LOW STEAM

Low temperature steaming within an operator set temperature range of 98°F to 210°F (30°C and 98°C).

⑥ CLEANING FUNCTION

An automatic cleaning cycle to heat the oven to the correct temperature, followed by a manual application of Combitherm Oven Cleaner and a 10 minute steam cleaning cycle.
An automatic boiler flush is initiated on boiler equipped models and a vinegar decalcification can also be conducted.

⑦ COOKING TEMPERATURE DIAL

To be manually set by the operator to the cooking temperature required.

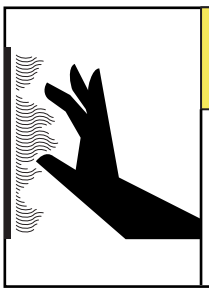

CAUTION

METAL PARTS OF THIS EQUIPMENT BECOME EXTREMELY HOT WHEN IN OPERATION. TO AVOID BURNS, ALWAYS USE HAND PROTECTION WHEN OPERATING THIS APPLIANCE.

S-CONTROL PANEL IDENTIFICATION

Антобщепит
vsezip.ru
+7(812)987-08-81

⑧ GOLD-N-BROWN™

The browning feature is an automatic function designed to regulate humidity for additional color to products as needed. This feature is particularly useful for adding color to high moisture products such as chicken and other poultry items or for additional browning of full loads and other moist products. In addition, this feature may be used to add texture to fried items such as French fries or breaded chicken. Gold-n-Brown can be used in both the combination mode and the convection mode and can be programmed into a cooking procedure.

⑨ OVEN DISPLAY

Indicates time remaining, interior oven temperature, or internal product temperature.

⑩ OVEN TEMPERATURE

To be pressed to display interior oven temperature.

⑪ SMOKING FEATURE (OPTION)

Provides the ability to smoke product, hot or cold, on all boiler-free electric models and on all gas models with the exception of the 10•20ESGAS, the 12•18ESGAS, and the 20•20ESGAS. The smoking function can be engaged in either the Combination mode or the Convection mode of operation. The smoking function cannot be operated when the oven is operating in either steam mode or low temperature steam mode.

⑫ COOKING TIMER

⊖ Turned to the left for continuous cooking time or to decrease time in increments of one minute.
⊕ Turn to the right to set and increase time in increments of one minute

⑬ CORE TEMPERATURE PROBE (OPTION)

Used to set the required internal product temperature.

⑭ FULL SPEED FAN POSITION

⑮ HALF SPEED FAN POSITION

⑯ OVEN COOL-DOWN POSITION

Assists in cooling the oven at an accelerated pace when changing from high to lower temperature cooking. **The oven door should be open when using this feature.**

S-CONTROL OPERATION

Зип Общепит
vsezip.ru
+7(812)987-08-81

The simplified, S-Control Combitherm oven includes all of the basic operating functions of the standard, ES-Series, Combitherm oven models. Oven operation is initiated with the use of rotary dials. Additional functions are initiated by pressing the represented function symbol.

All of the cooking procedures shown in this guide can be adapted for use with S-Control models by manually setting the suggested cooking mode, time, and temperature indicated.

PREHEATING

1. Rotate the **Cooking Mode** dial to the convection mode.
2. Rotate the **Cooking Temperature** dial to the preheating temperature required.
3. Rotate the **Cooking Timer** dial to the preheating time desired.
   - ⊖ Turn to the left for continuous time or to decrease time in increments of one minute.
   - ⊕ Turn to the right to set and increase time in increments of one minute.
4. When preheated, the oven can be operated in any cooking mode required.

CORE TEMPERATURE (OPTION)

1. Rotate the **Cooking Mode** dial to the required cooking mode.
2. Rotate the **Cooking Temperature** dial to the cooking temperature required.
3. Press the **Core Temperature** symbol. The letters "Cor" will appear in the display.

4. When "Cor" appears in the display, the timer dial will convert to internal product temperature.
   Rotate the **Cooking Timer** dial to the internal product temperature desired.
   - ⊖ Turn to the left to decrease temperature in increments of one degree.
   - ⊕ Turn to the right to increase temperature in increments of one degree.
5. In 3-seconds, oven will begin the cook and the display will indicate the internal product temperature reading of the probe.
6. One minute after the product reaches the set internal product temperature, a buzzer will sound indicating the end of the operating mode.

TO STOP THE BUZZER, OPEN THE OVEN DOOR OR TURN THE COOKING MODE DIAL TO THE OFF POSITION.

CHEF OPERATING TIPS

The Core Temperature should not be used for cooking thin products.

⚠ WARNING

DO NOT HANDLE PANS CONTAINING LIQUID OR SEMILIQUID PRODUCTS POSITIONED ABOVE THE EYE LEVEL OF THE OPERATOR. SUCH PRODUCTS CAN SCALD AND CAUSE SERIOUS INJURY.

Зип Общепит
vsezip.ru
+7(812)987-08-81

GOLD-N-BROWN™

BROWNING (PUSH)

Press the GOLD-N-BROWN browning symbol at the start of any cooking cycle in the combination mode or convection mode to automatically add additional product color.

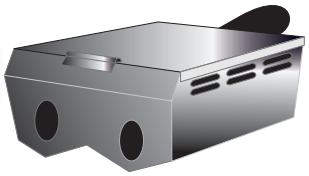

SMOKING (OPTION)

LOAD WOOD CHIPS.

- Measure one container full of dry wood chips.
- Soak dry chips in water for 5 minutes.
- Shake excess water off wood chips.
- Place moistened chips back into the container and position the container securely on the two prongs located on the interior back panel of the oven.

AVAILABLE FROM ALTO-SHAAM		
WOOD CHIPS	20 POUND BULK PACKS	
	APPLE	WC-22543
THE TOTAL WEIGHT OF WOOD CHIP BULK PACKS MAY VARY DUE TO HIGH MOISTURE CONTENT WHEN PACKAGED.	HICKORY	WC-2829
	CHERRY	WC-22541
	SUGAR MAPLE	WC-22545

SMOKING feature may be started at the beginning of any cooking cycle in the Combination mode or Convection mode.

Push the Smoker icon key.

A full container of wood chips will produce smoke for an approximate period of one to two hours depending on the cooking temperature being used for the selected product. The tested procedures in this manual for many of the products that are appropriate for smoking provide complete product smoke penetration and full smoke flavor.

When the cooking cycle is completed, a buzzer will sound indicating the end of the preheat function.

TO STOP THE BUZZER, OPEN THE OVEN DOOR OR TURN THE COOKING MODE DIAL TO THE OFF POSITION.

CHEF OPERATING TIP

Products such as ribs that require heavier smoke penetration to reach full smoke flavor should remain in the oven after cooking has been completed. Do not open the oven door. Set the oven in the Low Temperature Steam Mode at 140° to 160°F (60° to 71°C) and allow the product to remain in the oven for a period of one hour.

NOTE: Always keep the OVEN DOOR CLOSED whenever operating the smoking function.

The Combitherm Smoker can be operated without using the smoking function. After using the oven as a smoker, however, it is necessary to clean the oven in order to prevent a transfer of smoke flavor to non-smoked products. Cleaning instructions are provided in this manual.

WARNING

HOT STEAM CAUSES BURNS

ROTATE THE DOOR HANDLE TO THE FIRST OPEN ROTATION POSITION *ONLY*. STAND BACK AND WAIT UNTIL THE STEAM IS VENTED BEFORE FULLY OPENING THE DOOR.

Зип Общепит
vsezip.ru
+7(812)987-08-81

PREVENTIVE MAINTENANCE

Routine Cleaning 50

General Flush 57

Decalcification 58
Standard and Deluxe Control 58
S-Control 60

Return to Main Table of Contents 3

3M-06 ЦЕНТ

Preventive Maintenance

vsezip.ru
+7(812)987-08-81

In addition to the routine cleaning and maintenance procedures, there are several additional steps to be taken for both sanitation purposes and to keep the oven running at top operating efficiency. These additional safeguards will help prevent inconvenient down time and costly repairs.

- **DO NOT DISPOSE OF GREASE, FAT, OR SOLID WASTE DOWN THE OVEN DRAIN.** Fats and solids will eventually coagulate in the drain system, causing blockage. Consequently, water will back-up into the condenser and interior oven compartment, resulting in an oven that is inoperable.

- **MAKE CERTAIN THE DRAIN SCREEN IS ALWAYS IN PLACE. REMOVE ANY SOLID WASTE MATERIAL FROM THE DRAIN SCREEN BEFORE IT ENTERS THE DRAIN SYSTEM.** The routine removal of solids from the drain screen will help prevent blockage.

- **USE THE AUTHORIZED COMBITHERM OVEN CLEANER ONLY**. The use of unauthorized cleaning agents may discolor or harm the interior surfaces of the oven.

- **TO PROLONG THE LIFE OF THE DOOR GASKET, REMOVE AND CLEAN THIS ITEM DAILY.** The acids and related compounds found in fat, particularly chicken fat, will weaken the composition of the gasket unless cleaned on a daily basis.

- **TO ADDITIONALLY PROTECT GASKET LIFE, ALLOW OVEN DOOR TO REMAIN SLIGHTLY OPEN AT THE END OF THE PRODUCTION DAY.** An open door will relieve the pressure on the door gasket.

- **ROUTINELY CLEAN DOOR HINGES.** Open oven door to relieve tension. Clean all parts of the hinge.

ROLL-IN CART/FOOD TROLLEY CLEANING (ON EQUIPPED MODELS)

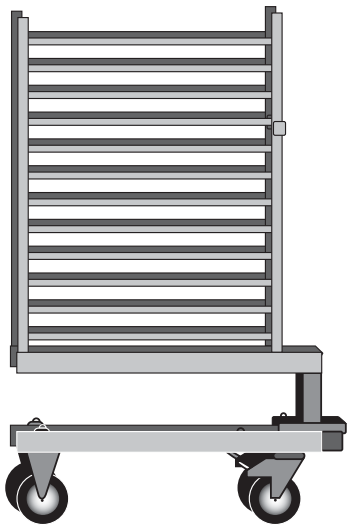

1. Remove food trolley to a cart wash area. Trolleys may be cleaned using any mild cleaning detergent and warm water.

2. Hand wipe all framing, slides, drip pan, and base. Thoroughly clean debris from the casters. A spray hose can be used for easier cart cleaning.

3. Remove detergent solution with warm water.

4. Wipe or spray with a sanitizing solution designed for use on metal and vinyl food contact surfaces.

5. Allow trolley to air dry.

As an alternative, trolleys can be sprayed with Combitherm liquid oven cleaner while inside the oven. Allow the trolley to remain in the oven through the normal cleaning cycle, followed by steps 2 through 5 above.

PROTECTING STAINLESS STEEL SURFACES

It is important to guard against corrosion in the care of stainless steel surfaces. Harsh, corrosive, or inappropriate chemicals can completely destroy the protective surface layer of stainless steel. Abrasive pads, steel wool, or metal implements will abrade surfaces causing damage to this protective coating and will eventually result in areas of corrosion. Even water, particularly hard water that contains high to moderate concentrations of chloride, will cause oxidation and pitting that result in rust and corrosion. In addition, many acidic foods spilled and left to remain on metal surfaces are contributing factors that will corrode surfaces. Proper cleaning agents, materials, and methods are vital to maintaining the appearance and life of this appliance. Spilled foods should be removed and the area wiped as soon as possible but at the very least, a minimum of once a day. Always thoroughly rinse surfaces after using a cleaning agent and wipe standing water as quickly as possible after rinsing.

CLEANING AGENTS

USE AUTHORIZED COMBITHERM LIQUID OVEN CLEANER ONLY

Cleaning agents must be chloride-free compounds and must not contain quaternary salts. Never use hydrochloric acid (muriatic acid) on stainless steel surfaces. Unauthorized cleaning agents may discolor or harm interior surfaces of the oven. Read and understand label and material safety data sheet before using the oven cleaner.

CLEANING MATERIALS

The cleaning function can usually be accomplished with the proper cleaning agent and a soft, clean cloth. When more aggressive methods must be employed, use a non-abrasive scouring pad on difficult areas and make certain to scrub with the visible grain of surface metal to avoid surface scratches. Never use wire brushes, metal scouring pads, or scrapers to remove food residue.

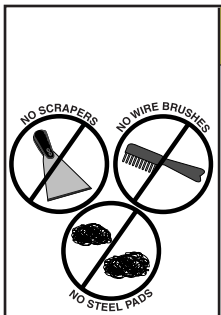

⚠ CAUTION

TO PROTECT STAINLESS STEEL SURFACES, COMPLETELY AVOID THE USE OF ABRASIVE CLEANING COMPOUNDS, CHLORIDE BASED CLEANERS, OR CLEANERS CONTAINING QUATERNARY SALTS. NEVER USE HYDROCHLORIC ACID (MURIATIC ACID) ON STAINLESS STEEL. NEVER USE WIRE BRUSHES, METAL SCOURING PADS OR SCRAPERS.

PREVENTIVE MAINTENANCE

3M-06 ЦЕНТ
vsezip.ru
+7(812)987-08-81

Establishing a routine cleaning and maintenance schedule will help keep the Combitherm oven running at top operating efficiency and is an absolutely essential part of a comprehensive sanitation program. Good equipment maintained and kept clean works better and lasts longer. ***PROTECT YOUR INVESTMENT.***

DAILY GASKET CLEANING

It is important to prolong the life of the oven gasket by cleaning this item on a daily basis. Routine cleaning will help protect the composition of the gasket from deterioration caused by acidic foods. After allowing the oven to cool, remove pull-out gasket and wash in hot, soapy water. **DO NOT** place gasket in the dishwasher.

⚠ CAUTION

Always replace the gasket before cleaning the oven interior or operating the oven.

PROBE USAGE AND CLEANING

After each use of the CORE TEMP mode, wipe the probe tip with a clean paper towel to remove food debris. Follow by wiping the probe with a disposable alcohol pad. Return the probe to the proper door bracket position.

PROBE CLEANING PROCEDURES

1. Remove all food soil from probe between loads and at the end of each production shift. Wipe the entire probe, probe cable assembly, and probe holding bracket with warm detergent solution and a clean cloth.
2. Remove detergent by wiping the probe, cable, and bracket with clean rinse water and a cloth.
3. Wipe probe and probe bracket with disposable alcohol pad or sanitizing solution recommended for food contact surfaces.
4. Allow probe and cable to air dry in the probe holding bracket.
5. Wipe the probe with a disposable alcohol pad prior to inserting in a new food product.

DAILY OVEN CLEANING

To be performed at the end of the production day or between production shifts.

DAILY STEAM GENERATOR FLUSH

(*ELECTRIC BOILER EQUIPPED MODELS ONLY*)

When operating the oven on a regular basis, the steam generator must be flushed once a day. This procedure will prevent lime deposits and scale build-up from forming in the steam generator. A steam generator flush is automatically initiated during the cleaning function on S-Control models.

REGULAR DECALCIFICATION

(*ELECTRIC BOILER EQUIPPED MODELS ONLY*)

It is VERY important to decalcify the steam generator, particularly in areas with extremely hard water. In addition to the daily steam generator flush, this procedure should be performed once a month or more frequently depending on usage and water conditions.

MONTHLY CLEANING

- Water Intake Filter
- Drain Pipe
- Spray Head

⚠ CAUTION

ALLOW THE OVEN TO COOL BELOW 280°F (140°C) BEFORE STARTING THE AUTO-CLEAN FUNCTION.

NOTE: The temperature in the display indicates the air temperature inside the oven compartment and not the interior walls of the oven. Always make certain to allow the oven walls to cool to a minimum of 280°F (140°C) before cleaning.

vsezip.ru

NOTE

USE AUTHORIZED COMBITHERM LIQUID OVEN CLEANER ONLY.

Unauthorized cleaning agents may discolor or harm interior surfaces of the oven. Read and understand label and material safety data sheet before using the oven cleaner.

DANGER

RUBBER GLOVES AND PROTECTIVE EYE WEAR MUST BE WORN WHEN USING THE OVEN CLEANER.

Causes severe burns. Do not get in eyes, on skin, or on clothing. Do not wear contacts. Harmful or fatal if swallowed. Do not breathe mist. Use in well ventilated area. Keep out of reach of children. Do not use on aluminum. Do not mix with anything but water.

THOROUGHLY RINSE EMPTY CONTAINER WITH WATER AND SAFELY DISCARD.

WARNING

WATER SUPPLY MUST BE OPEN WHEN CLEANING PROGRAM IS ACTIVATED.

VERIFY WATER SUPPLY BEFORE STARTING CLEANING PROGRAM.

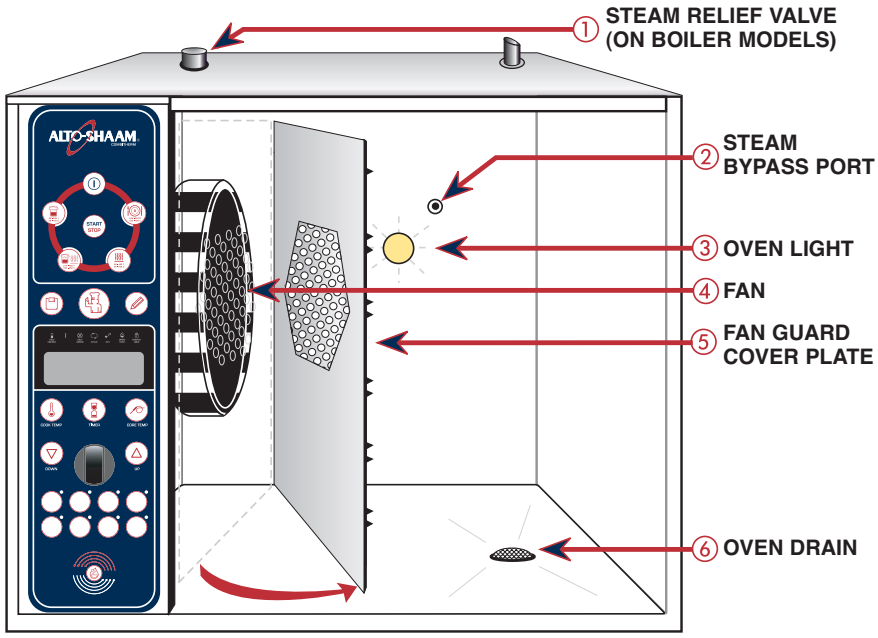

3M-06 ЦЕНТ
vsezip.ru
+7(812)987-08-81

AutoClean™ AUTOMATIC CLEANING PROGRAM

Remove all food scraps and residue from the oven drain. Remove shelves, side racks and pans and wash separately.

With the oven power on

PRESS THE CHEF FUNCTION KEY.

Rotate the adjustment knob until the AutoClean symbol is highlighted in the display.

PRESS THE CHEF FUNCTION KEY.

THE CONTROL WILL ASK FOR VERIFICATION OF THE FOLLOWING ITEMS BEFORE THE FUNCTION CAN BE STARTED:

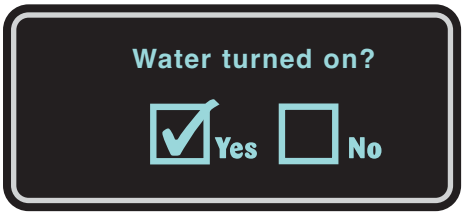

Verify water is supplied to the oven and press the up △ and down ▽ arrow keys or rotate the adjustment knob to select "YES".

PRESS THE CHEF FUNCTION KEY.

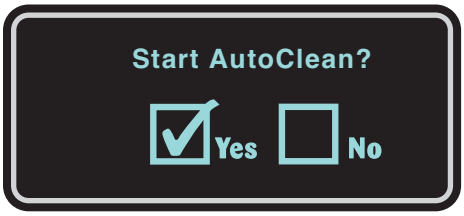

Press the up △ and down ▽ arrow keys or rotate the adjustment knob to select "YES" for the automatic cleaning function.

PRESS THE CHEF FUNCTION KEY TO CONFIRM THE SETTING AND START THE CLEANING PROGRAM.

THE OVEN WILL BEGIN A 50 MINUTE CLEANING AND RINSE CYCLE.

DISPLAY WILL COUNT DOWN INDICATING TIME REMAINING IN THE CLEANING CYCLE.

After 10 minutes, a buzzer will sound and Display will show "Open Door/Spray Cleaner".

Wearing safety glasses and rubber gloves, open door, remove the drain screen and spray Combitherm liquid oven cleaner diretly into the drain pipe.

Generously spray the interior oven surfaces with an even coat of Combitherm Liquid Oven Cleaner. Spray all built-in components.

Insert the Combitherm liquid oven cleaner spray nozzle directly into the Steam Bypass Port and spray several times.

ON A WEEKLY BASIS - Loosen the thumb screw(s) and swing Fan Guard Cover Plate toward the back of the oven. Spray the back of the Fan Guard Cover Plate, the oven fan, and the left-hand side of the oven.

When oven door is closed again cleaning cycle will resume for the remaining 40 minutes.

At the end of the cleaning cycle, the oven will beep and the display will indicate the end of the cycle.

Press the start / stop key to stop the buzzer and return the oven to normal operation.

LEAVE DOOR SLIGHTLY OPEN AFTER CLEANING

Электронный архив
vsezip.ru
+7(812)987-08-81

AUTOCLEAN™ AUTOMATIC CLEANING PROGRAM (CONTINUED)

FORCED RINSING MODE:

If the cleaning cycle is stopped during cleaning, the unit will immediately go into a Forced Rinsing mode for 5 minutes.

If power is lost or the unit is turned off during cleaning, the unit will go into a Forced Rinsing mode when power is restored, or unit is turned back on.

Once the Forced Rinsing is complete “Cleaning Interrupted” will appear on the display.

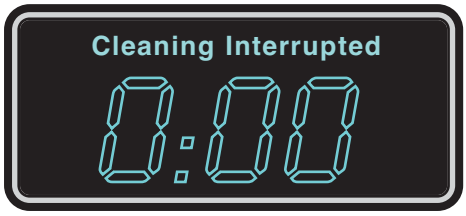

Press the start/stop key to return the oven to normal operation.

NOTE:

IF THE DOOR IS OPENED DURING THE CLEANING PROCESS, “CLOSE THE DOOR!” WILL APPEAR IN THE DISPLAY.

LEAVE DOOR SLIGHTLY OPEN AFTER CLEANING

Combitherm
vsezip.ru
+7(812)987-08-81

AUTOCLEAN™ AUTOMATIC CLEANING PROGRAM

S- CONTROL OPTION

Remove all food scraps and residue from the oven drain. Remove shelves, side racks and pans and wash separately.

With the oven power ON.

Rotate the **Cooking Mode** dial to the **Cleaning** mode.

"CLN" will appear in the display.

After 1 minute "50" will appear in the display indicating a 50 minute cleaning cycle.

THE OVEN WILL BEGIN A 50 MINUTE CLEANING AND RINSE CYCLE.

DISPLAY WILL COUNT DOWN INDICATING TIME REMAINING IN THE CLEANING CYCLE.

After 10 minutes, a buzzer will sound and display will show "DOR".

Wearing safety glasses and rubber gloves, open door, remove the drain screen and spray Combitherm liquid oven cleaner directly into the drain pipe.

Generously spray the interior oven surfaces with an even coat of Combitherm Liquid Oven Cleaner. Spray all built-in components.

Insert the Combitherm liquid oven cleaner spray nozzle directly into the Steam Bypass Port and spray several times.

ON A WEEKLY BASIS - Loosen the thumb screw(s) and swing Fan Guard Cover Plate toward the back of the oven. Spray the back of the Fan Guard Cover Plate, the oven fan, and the left-hand side of the oven.

When oven door is closed again cleaning cycle will resume for the remaining 40 minutes.

At the end of the cleaning cycle "FIN" will appear in the display. Turn the **Cooking Mode** dial to the **OFF** position.

FORCED RINSING MODE:

If the cleaning cycle is stopped after 10 minutes in the cleaning cycle, the unit will immediately go into a Forced Rinsing mode and display "RIN" for 5 minutes.

If power is lost or the unit is turned off during cleaning, the unit will go into a Forced Rinsing mode when power is restored, or unit is turned back on.

After a period of 5 minutes "FIN" will appear in the display.

LEAVE DOOR SLIGHTLY OPEN AFTER CLEANING

STANDARD CONTROL
DELUXE CONTROL

AUTOMATIC STEAM GENERATOR FLUSH
AT THE START OF THE WORK DAY

Flushing the electric Combitherm steam generator on a daily basis helps to prolong the life of the steam generator heating elements and helps prevent the necessity of service requirements. The control provides this feature as an automatic function when the oven ON/OFF power key is pressed to the ON position at the start of each working day.

PRESS THE ON/OFF POWER KEY TO THE ON POSITION.

DISPLAY MESSAGE INDICATES:

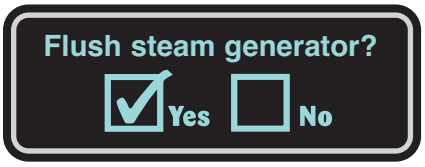

YES

PRESS THE START KEY OR CHEF FUNCTION KEY to begin the steam generator flush.

The steam generator is automatically drained, flushed, and refilled with water within 5 minutes or less. Following this time period, the Combitherm is ready for operation.

NO

TO CANCEL THE STEAM GENERATOR FLUSH, ROTATE THE ADJUSTMENT KNOB ONE TURN TO THE RIGHT UNTIL THE DISPLAY INDICATES “NO”.

PRESS THE START/STOP KEY OR CHEF FUNCTION KEY to confirm cancellation.

If steam generator flush cancellation is not initiated within 10 seconds of the appearance of the display message, the flushing function will automatically start. Following cancellation, the Combitherm is ready for operation. The flushing process ***must*** be initiated manually at a later time during the working day if not conducted at startup.

MANUAL STEAM GENERATOR FLUSH

PERFORM DAILY WHEN THE STEAM GENERATOR FLUSH IS NOT PERFORMED AT THE START OF THE WORKING DAY.

WITH THE OVEN AT ROOM TEMPERATURE

1. Press the Power Switch to the OFF position. Rotate the Steam Generator Drain Cap located at the back of the oven until water begins to flow from the four holes in the cap. In approximately 20 to 60 seconds, a sufficient quantity of water will have drained from the steam generator so that the drain cap can be completely removed.
2. As the water continues to flow from the generator, it will have a milky or cloudy appearance, which indicates deposits in the generator are beginning to flush through the system. Let the water continue to drain until the flow begins to subside.
3. When the flow begins to subside, remove the hand-held hose from the side of the oven and direct a stream of fresh water directly into the steam generator drain opening located directly behind the Steam Generator Drain Cap. Repeat this procedure several times until the water begins to run clear.
4. Press the oven Power Switch to the ON position. When the audible signal is heard, press the Steam Mode Key. A new supply of fresh, cold water will begin to flow through the steam generator. Repeat this procedure several times until the water runs completely clear.
5. Once the water is completely clear, replace the Steam Generator Drain Cap over the steam generator drain by turning it clockwise, by hand, until there is a slight resistance.

DO NOT OVER-TIGHTEN STEAM GENERATOR DRAIN CAP.

Combitherm
vsezip.ru
+7(812)987-08-81

STANDARD CONTROL
DELUXE CONTROL

DECALCIFICATION ON BOILER EQUIPPED MODELS
using ScaleFree™ or Distilled White Vinegar

STANDARD CONTROL
DELUXE CONTROL

ScaleFree™ Descaling Compound is an acid-based descaler combined with a proprietary chelating agent that is effective in dissolving and removing carbonate, lime-scale and iron scale build-up caused by hard water. ScaleFree efficiently and effectively removes lime-scale build-up from combi ovens.

ScaleFree™ is a non-hazardous, Biodegradable Citrus Based Powder that when mixed with water becomes a powerful lime-scale remover.

It is ***VERY*** important to decalcify the oven, particularly in areas with extremely hard water.

PERFORM ONCE A MONTH in addition to the daily steam generator flush.

WITH THE OVEN AT ROOM TEMPERATURE

1. Begin decalcification with the power key in the *OFF* position.
2. Open oven door. Wearing hand protection, rotate the Steam Generator Drain Cap ⑦ until water begins to flow from the four holes in the cap. In approximately 20 to 60 seconds, a sufficient quantity of water will have drained from the steam generator so that the drain cap can be completely removed.
3. Let the water continue to drain until the flow completely subsides. Replace the Steam Generator Drain Cap ⑦ by turning it clockwise until there is a slight resistance. Close oven door.
4. Using the batch mix instructions on the label, mix up 1 gallon of ***ScaleFree***™ solution at a time ***or*** one gallon of distilled white vinegar for counter top models and 3 gallons of distilled white vinegar for floor standing models. Using a funnel inserted into the Steam Relief Valve ①, slowly pour solution in to the Steam Generator until full.
5. Remove funnel from Steam Relief Valve ①.

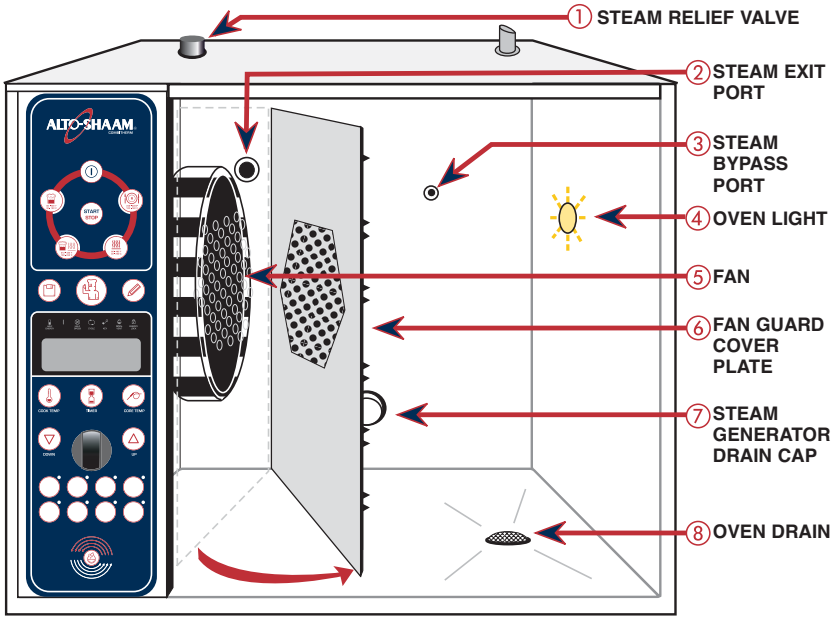

PRESS THE ON/OFF POWER KEY TO THE *ON* POSITION.
The unit will add water if needed.

PRESS THE STEAM PROGRAM KEY
The unit will begin to pre-heat.

WARNING

DURING DECALCIFICATION THE WATER FLOWING FROM THE DRAIN CAP IS EXTREMELY HOT! USE HAND PROTECTION WHEN TOUCHING THE STEAM GENERATOR DRAIN CAP. DO NOT TOUCH THE WATER FLOWING OUT OF THE STEAM GENERATOR DRAIN CAP OR STEAM GENERATOR DRAIN.

DO NOT PRESS START. *(Continued on next page)*

Электронный архив
vsezip.ru
+7(812)987-08-81

STANDARD CONTROL
DELUXE CONTROL

ALLOW THE UNIT TO PREHEAT FOR 30 MINUTES.

After a period of 30 minutes —

PRESS THE ON/OFF POWER KEY TO THE *OFF* POSITION.

6. Open the oven door. ***USING HAND PROTECTION***, rotate the Steam Generator Drain Cap ⑦ until water begins to flow from the four holes in the cap. In approximately 20 to 60 seconds, a sufficient quantity of water will have drained from the steam generator so that the drain cap can be completely removed. Let the water continue to drain until the flow completely subsides.

7. Loosen the thumb screw(s) and swing Fan Guard Cover Plate ⑥ toward the back of the oven. Using the hand-held hose, direct a stream of water directly into the Steam Generator Drain ⑦ and Steam Exit Port ② several times. Close the swing-out Cover Plate ⑥. Lock the cover into place and tighten thumb screw(s). Close the oven door.

PRESS THE ON/OFF POWER KEY TO THE *ON* POSITION.
A new supply of fresh water will begin to flush the steam generator.

ALLOW THE WATER TO RUN FOR 2 MINUTES
to continue to flush out all remaining solution.

PRESS THE ON/OFF POWER KEY TO THE *OFF* POSITION.

8. Open oven door. ***USING HAND PROTECTION***, replace the Steam Generator Drain Cap ⑦ by turning it clockwise until there is a slight resistance. Close oven door.

PRESS THE ON/OFF POWER KEY TO THE *ON* POSITION.
The unit will start to fill.

START STOP

PRESS THE STEAM MODE KEY AND THEN PRESS THE START KEY.
ALLOW UNIT TO RUN FOR 20 MINUTES IN THE STEAM MODE.

PRESS THE ON/OFF POWER KEY TO THE *OFF* POSITION.

9. Open the oven door. ***USING HAND PROTECTION***, rotate the Steam Generator Drain Cap ⑦ until water begins to flow from the four holes in the cap. In approximately 20 to 60 seconds, a sufficient quantity of water will have drained from the steam generator so that the drain cap can be completely removed. Let the water continue to drain until the flow completely subsides. Replace the Steam Generator Drain Cap ⑦ by turning it clockwise until there is a slight resistance.

At the end of the production day, leave the door slightly ajar.

THE UNIT IS NOW READY TO BE USED.

DO NOT COOK IN ANY PROGRAM MODE WITH ***ScaleFree***™ OR VINEGAR IN THE STEAM GENERATOR SYSTEM.

3MT-06Lq-MT
vsezip.ru
+7(812)987-08-81

S-CONTROL OPTION

DECALCIFICATION ON BOILER EQUIPPED MODELS

using ScaleFree™ or Distilled White Vinegar

S-CONTROL OPTION

ScaleFree™ Descaling Compound is an acid-based descaler combined with a proprietary chelating agent that is effective in dissolving and removing carbonate, lime-scale and iron scale build-up caused by hard water. ScaleFree efficiently and effectively removes lime-scale build-up from combi ovens.

ScaleFree™ is a non-hazardous, Biodegradable Citrus Based Powder that when mixed with water becomes a powerful lime-scale remover.

It is ***VERY*** important to decalcify the oven, particularly in areas with extremely hard water.

PERFORM ONCE A MONTH in addition to the daily steam generator flush.

WITH THE OVEN AT ROOM TEMPERATURE

1. Begin decalcification with the power knob in the *OFF* position.

2. Open oven door. Wearing hand protection, rotate the Steam Generator Drain Cap ⑦ until water begins to flow from the four holes in the cap. In approximately 20 to 60 seconds, a sufficient quantity of water will have drained from the steam generator so that the drain cap can be completely removed.

3. Let the water continue to drain until the flow completely subsides. Replace the Steam Generator Drain Cap ⑦ by turning it clockwise until there is a slight resistance. Close oven door.

4. Using the batch mix instructions on the label, mix up 1 gallon of ***ScaleFree™*** solution at a time ***or*** one gallon of distilled white vinegar for counter top models and 3 gallons of distilled white vinegar for floor standing models. Using a funnel inserted into the Steam Relief Valve ①, slowly pour solution in to the Steam Generator until full.

5. Remove funnel from Steam Relief Valve ①.

TURN THE SELECTION KNOB TO THE STEAM POSITION.

THE UNIT WILL ADD WATER IF NEEDED AND BEGIN TO PREHEAT.

(Continued on next page)

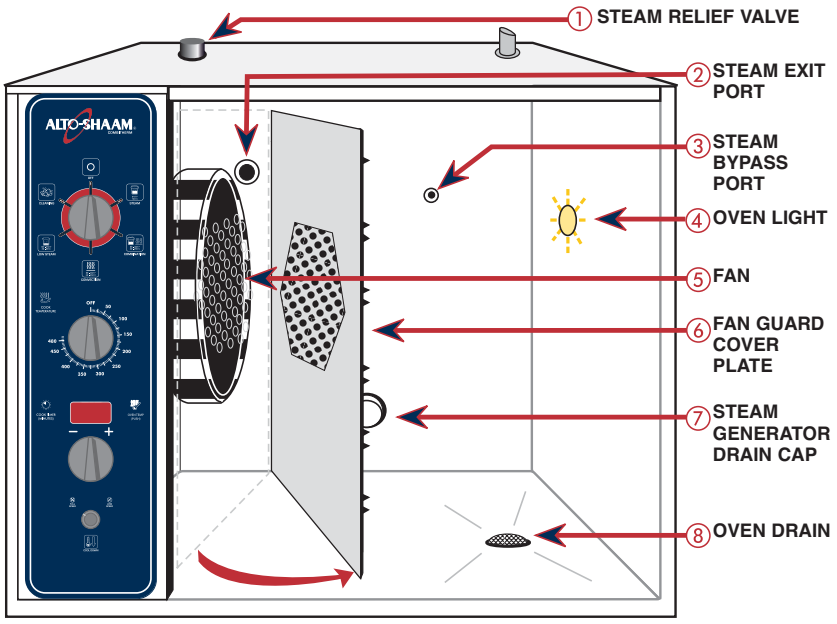

WARNING

DURING DECALCIFICATION THE WATER FLOWING FROM THE DRAIN CAP IS EXTREMELY HOT! USE HAND PROTECTION WHEN TOUCHING THE STEAM GENERATOR DRAIN CAP. DO NOT TOUCH THE WATER FLOWING OUT OF THE STEAM GENERATOR DRAIN CAP OR STEAM GENERATOR DRAIN.

Электронный архив
vsezip.ru
+7(812)987-08-81

ALLOW THE UNIT TO PREHEAT FOR 30 MINUTES.

After a period of 30 minutes —

S- CONTROL OPTION

TURN THE SELECTION KNOB TO THE *OFF* POSITION.

6. Open the oven door. ***USING HAND PROTECTION***, rotate the Steam Generator Drain Cap ⑦ until water begins to flow from the four holes in the cap. In approximately 20 to 60 seconds, a sufficient quantity of water will have drained from the steam generator so that the drain cap can be completely removed. Let the water continue to drain until the flow completely subsides.

7. Loosen the thumb screw(s) and swing Fan Guard Cover Plate ⑥ toward the back of the oven. Using the hand-held hose, direct a stream of water directly into the Steam Generator Drain ⑦ and Steam Exit Port ② several times. Close the swing-out Cover Plate ⑥. Lock the cover into place and tighten thumb screw(s). Close the oven door.

STEAM

TURN THE SELECTION KNOB TO THE *STEAM* POSITION.
A new supply of fresh water will begin to flush the steam generator.

ALLOW THE WATER TO RUN FOR 2 MINUTES OF OPERATION IN THE STEAM MODE,
to continue to flush out all remaining solution.

TURN THE SELECTION KNOB TO THE *OFF* POSITION.

8. Open oven door. ***USING HAND PROTECTION***, replace the Steam Generator Drain Cap ⑦ by turning it clockwise until there is a slight resistance. Close oven door.

STEAM

TURN THE SELECTION KNOB TO THE *STEAM* POSITION.
The unit will start to fill.

ALLOW UNIT TO RUN FOR 20 MINUTES IN THE STEAM MODE.
TURN THE SELECTION KNOB TO THE *OFF* POSITION.

9. Open the oven door. ***USING HAND PROTECTION***, rotate the Steam Generator Drain Cap ⑦ until water begins to flow from the four holes in the cap. In approximately 20 to 60 seconds, a sufficient quantity of water will have drained from the steam generator so that the drain cap can be completely removed. Let the water continue to drain until the flow completely subsides. Replace the Steam Generator Drain Cap ⑦ by turning it clockwise until there is a slight resistance.

At the end of the production day, leave the door slightly ajar.

THE UNIT IS NOW READY TO BE USED.

DO NOT COOK IN ANY PROGRAM MODE WITH ***ScaleFree***™ OR VINEGAR IN THE STEAM GENERATOR SYSTEM.

Зип Общепит
vsezip.ru
+7(812)987-08-81

NOTES

Зип Общепит

SERVICE MODE AND ERROR CODES

vsezip.ru
+7(812)987-08-81

Service Mode Instructions 64

Error Codes..... 66

Emergency Operation 69

Return to Main Table of Contents 3

SERVICE MODE INSTRUCTIONS

The service mode is accessible on units with Standard or Deluxe controls only.

TO ACCESS THE SERVICE MODE

PRESS THE ON/OFF POWER KEY TO THE *ON* POSITION.

PRESS THE COOK TEMP, TIME AND CORE TEMP KEYS SIMULTANEOUSLY.

The service mode will appear in the display.
or
If the unit does not have a core temperature key, an additional black button is located on the back of the display board. Remove the left-hand side of the unit or the front control panel to access it.

TO NAVIGATE IN THE SERVICE MODE

R-Number Menu

The service mode has three menus and will open in the R-Number Menu. This menu is read-only and displays the current temperature (in Celsius), the status of all other sensors and switches, and the most recent errors and their time of occurrence. Rotate the adjustment knob to view the status values.

To view the last 10 errors that have occurred:

- Rotate the adjustment knob until the parameter R38 shows in the display.
- Press the up △ arrow to display the last 10 errors.
- Press the Chef Function key to toggle between the error description and the date and time it occurred.
- Press the down ▽ arrow to return to the parameter R38.
- Rotate the adjustment knob to scroll to another parameter.

C-Number Menu

The second menu, the C-Number Menu, is where all sensor values are set. These values are changeable, but should only be changed under the direction of an Alto-Shaam factory representative. **Unauthorized changes can cause damage.** Rotate the adjustment knob to view these values.

D-Number Menu

The third menu, the D-Number Menu, is the diagnostic menu. Here all components can be activated for 10 seconds at a time to aid in troubleshooting the oven. To test a component:

- Rotate the adjustment knob until the desired parameter (D07 Fan [0], D12 Oven Lamp [0], etc.) shows in the display.
- Press the up △ arrow to highlight the value [0].
- Rotate the adjustment knob to change [0] to [1]. The component will activate for 10 seconds and then the display will return to [0].
- Press the down ▽ arrow to return to the parameter *without* the value highlighted.
- Rotate the adjustment knob to scroll to another parameter.

vsezip.ru
+7(812)987-08-81

TO EXIT THE SERVICE MODE

START STOP PRESS THE START KEY TO EXIT FROM THE SERVICE MODE TO THE NORMAL TIME DISPLAY.

MOST COMMONLY USED PARAMETERS

R-Numbers	C-Numbers	D-Numbers
R01 CTC-1 Multi-Point Product Probe	C01 Nom Standby Temp	D01 Delete Errors
R02 CTC-2 Multi-Point Product Probe	C02 Nom Cond Temp	D02 Key Lock
R03 CTC-3 Multi-Point Product Probe	C03 Fan on Cycle	D03 Delete All Programs
R04 CTC-4 Multi-Point Product Probe	C04 Fan off Cycle	D04 Self Test BM (Display Board)
R05 Oven Temp Sensor (N-6)	C05 Cont Steam	D06 Red Fan Speed
R06 Bypass Probe (B-5)	C06 Init	D07 Fan
R07 Condensate Probe (B-3)	C07 Humidity S	D08 Steam Gen 1
R08 Steam Generator (B-4)	C08 Humidity SS	D09 Convection 1
R09 STB Probe (N-8 Immersion Safety Probe)	C09 Humidity Quick	D10 Steam Gen 2
R10 PT-100 Single-Point Product Probe	C10 Humidity Reg	D11 Convection 2
R13 Electronic Temp (Control Temperature)	C11 Humidity Reg g	D12 Oven Lamp
R20 Lower Level-Water Level Probe *	C12 Bitfield 1	D13 Cond Cooling
R21 Upper Level-Water Level Probe *	C13 Bitfield 2	D14 Steam Gen Fill
R23 Door Switch *	C19 PIN	D28 Venting Motor
R29 Software BM (Display Board)	C23 Time Browning	D30 Smoking Element
R30 Software SM (Relay Board)	C24 Door Venting	D31 Solenoid Valve
R31 Software KM (HACCP Board)		
R38 Errors (see R-Number instructions)		

* For these parameters, [0] = Not Satisfied, [1] = Satisfied.

TO REBOOT THE CONTROL

Rebooting the control can sometimes fix an error code or a control that is frozen or confused:

PRESS AND HOLD THE ON/OFF POWER KEY FOR FIVE SECONDS.

The display will flash and show ST5000 for 20 seconds, followed by “Please Wait”, and then will return to the time and date.

PRESS THE ON/OFF POWER KEY MOMENTARILY.

The unit will turn on and can be operated normally.

ERROR CODES

When the oven malfunctions, an error code will appear in the display.

START STOP PRESS THE START KEY TO ACKNOWLEDGE THE ERROR.

The keys that begin to flash represent operational modes that are still usable. Refer to Emergency Operation.

When the oven fault is corrected, the Combitherm will return to normal Operation.

ERROR CODES AND REASONS

Error Code	Display Shows	When does the error occur?	Possible reason
E01	Low Water	**ES units only:** • Activated if running in any mode and the water level drops below the low level sensor. • Activated if in Standby mode and the water level drops below the low level sensor for 3 minutes.	• Water supply is shut off. • Low water pressure. • Steam generator drain cap is off or loose. • Drain pump is not sealing. • Faulty or scaled water level probe. • Faulty or plugged solenoid valve assembly. • Wiring or connection issue.
E02	Control Temp High	Activated if the temperature of the electrical control is higher than 176°F (80°C) for 20 seconds.	• Cooling fan not operating. • Unit is next to a heat producing source (there is less than 20" clearance for the control side). • Exhaust hood is not operating (if applicable).
E03	Fan Malfunction	Activated if the motor protection switch is tripped.	• Motor rotation is backwards. • Incorrect power to the unit. • Connection problem at X-7 plug on the relay board pins 3-4.
E04	Aux Fan Fault	Auxiliary fan malfunction.	• Control setup programming error. • Contact factory.
E11	Excess Oven Temp	Activated if the oven cavity temperature is higher than 572°F (300°C) for 25 seconds.	• Connection issue with oven temperature sensor. • Convection element contactor is stuck. • Faulty oven temperature sensor.
E13	Excess Steam Gen Temp	**ES units only:** Activated if the temperature of the steam generator probe (B-4) is higher than 248°F (120°C) for 26 seconds. **ESi units only:** • Activated if the position of personality jumper on X-3 is incorrect. • Activated if the position of B-4 jumper is incorrect.	• Problem with water level probe. • Scale build-up inside steam generator. • Steam element contactor is stuck. • Connection issue with B-4 probe. • Faulty B-4 probe. • Jumper on X-3 is improperly positioned. Should be between 2-8 or, if it is a smoker, between 2-9. • Jumper on X-6a is improperly positioned. Should be between 13-14.

Электронный архив
vsezip.ru
+7(812)987-08-81

ERROR CODES AND REASONS (continued)

Error Code	Display Shows	When does the error occur?	Possible reason
E15	Excess Condensate Temp	Activated if the temperature of the condensate probe (B-3) is higher than 212°F (100°C) for 26 seconds.	• Water supply is shut off. • Faulty or plugged solenoid valve (Y-2). • Connection issue at B-3 probe. • Faulty B-3 probe.
E21	Oven Probe Fault	Activated if oven temperature probe (N-6) is interrupted.	• Connection issue at N-6 probe. • Faulty N-6 probe.
E22	Core Temp Probe Fault	Activated if cooking in Core Temp mode and the CTC sensor measures an excessive temperature.	• CTC sensor is damaged. • 4-point CTC sensor is activated, but 1-point CTC sensor is installed. • Cable connection of CTC sensor is damaged. • Hardware problem on control unit (SM).
E23	Steam Gen Probe Fault	**ES units only:** Activated if the steam generator probe (B-4) is interrupted. **ESi units only:** • Activated if the position of personality jumper on X-3 is incorrect. • Activated if the position of B-4 jumper is incorrect.	• Connection issue at B-4 probe. • Faulty B-4 probe. • Jumper on X-3 is improperly positioned. Should be between 2-8 or, if it is a smoker, between 2-9. • Jumper on X-6a is improperly positioned. Should be between 13-14.
E24	Bypass Probe Fault	Activated if the bypass probe (B-5) is interrupted.	• Connection issue at B-5 probe. • Faulty B-5 probe.
E25	Condensate Probe Fault	Activated if the condensate probe (B-3) is interrupted.	• Connection issue at B-3 probe. • Faulty B-3 probe.
E26	Steam Gen Safety Probe Fault	Activated if the steam generator safety probe (N-8) is interrupted.	• Connection issue at N-8 probe. • Faulty N-8 probe.
E27	Excess Steam Gen Safety Temp	**ES units only:** Activated if the steam generator safety probe (N-8) measures a temperature in excess of 266°F (130°C). **ESi units only:** • Activated if the position of N-8 jumper is incorrect.	• Problem with water level probe. • Scale build-up inside steam generator. • Steam element contactor is stuck. • Connection issue with N-8 probe. • Faulty N-8 probe. • Jumper on X-6b is improperly positioned. Should be between 1-2.
E29	Probe Short to Frame	Activated if one or more of the temperature sensors were connected to GND for 5 seconds.	• Connection issue at any of the temperature sensors. • Temperature sensor shorted to ground/faulty.

Электронный архив
vsezip.ru
+7(812)987-08-81

ERROR CODES AND REASONS (continued)

Error Code	Display Shows	When does the error occur?	Possible reason
E34	DE (Drain) Pump Failure	Activated if water level did not drop below the low level sensor in the generator during a steam generator flush.	• Problem with water level probe. • Scale build-up inside steam generator. • Scale plugging drain pump. • Faulty drain pump.
E35	Venting Error	Activated when vent switch reads open (vent closed) when it should be closed (vent open), or when it reads closed (vent open) when it should be open (vent closed).	• Alignment issue between motor cam and micro switch. • Connection issue at micro switch. • Connection issue at control. • Faulty vent switch. • Faulty vent motor.
E36	Steam Temp High	Activated when oven temperature probe (N-6) measures a temperature in excess of 395°F (202°C) when running in Steam or Combi mode.	• Water supply is shut off while unit is running in Steam or Combi mode. • Plugged or faulty Y-1 solenoid. • Obstruction between Y-01 solenoid and water inlet.
E80	ID Error	Control is unable to detect whether unit is gas or electric.	• Connection issue at X-3 personality jumper. • Faulty control.
E81	Program Memory Error	Temperature value or time value of a program step is not allowed.	• Program was generated in °C and control has been switched to °F. • Program was generated in °F and control has been switched to °C.
E82	WP Error	Temperature value or time value of current cooking algorithm is out of allowed array.	• Delete program and reinstall.
E83	Algo Error	Cooking algorithm sent by operating module (BM) is unknown to control unit (SM).	• Software versions of control unit and operating module are incompatible. • Software error in operating module.
E96	Connection Error	No or bad communication between control unit (SM) and operating module (BM).	• Connection issue at ribbon cable on display or relay board. • Faulty ribbon cable. • Software versions of control unit and operating module are incompatible.

Service Manual
vsezip.ru
+7(812)987-08-81

EMERGENCY OPERATION

In the event of an error code, the Combitherm may be operated on a limited basis. Error conditions under which continued operation can be conducted are indicated by "Yes" in the chart shown below.

When the oven malfunctions, an error code will appear in the display.

START STOP PRESS THE START KEY TO ACKNOWLEDGE THE ERROR.

The keys that begin to flash represent operational modes that are still usable.

SELECT AND PRESS ONE OF THE COOKING MODES INDICATED.

The oven control will only respond to the mode keys that are flashing.

SET THE OVEN CONTROLS AS IF OPERATING UNDER NORMAL CIRCUMSTANCES.

Depending on the error code involved, oven function, such as temperature range, may be limited.

START STOP PRESS THE START KEY TO BEGIN THE COOKING PROCESS.

START STOP PRESS THE START KEY WHEN THE TIMER EXPIRES.

When the oven fault is corrected, the Combitherm will return to normal Operation.

CONTINUED OPERATION UNDER ERROR CONDITIONS

Error Code	Display Shows	ES	ESi	Steam Mode	Combination Mode	Convection Mode	Retherm Mode
E01	Low Water	Yes	N/A	No	No	To 365°F	No
E02	Control Temp High	Yes	Yes	Yes	To 284°F	To 284°F	To 284°F
E03	Fan Malfunction	N/A	N/A	—	—	—	—
E04	Aux Fan Fault	Yes	Yes	Yes	To 284°F	To 284°F	To 284°F
E11	Excess Oven Temp	Yes	Yes	No	No	No	No
E13	Excess Steam Gen Temp	Yes	N/A	No	No	No	No
E15	Excess Condensate Temp	Yes	Yes	No	No	To 356°F	No
E21	Oven Probe Fault	Yes	Yes	212°F only	No	No	No
E22	Core Temp Probe Fault	Yes	Yes	Yes	Yes	Yes	Yes
E23	Steam Gen Probe Fault	Yes	N/A	Yes	Yes	Yes	Yes
E24	Bypass Probe Fault	Yes	Yes	To 210°F	No	Yes	No
E25	Condensate Probe Fault	Yes	Yes	Yes	To 356°F	To 356°F	To 320°F
E26	Steam Gen Safety Probe Fault	Yes	N/A	Yes	Yes	Yes	Yes
E27	Excess Steam Gen Safety Temp	Yes	N/A	No	No	No	No
E29	Probe Short to Frame	Yes	Yes	No	No	No	No
E34	DE (Drain) Pump Failure	Yes	N/A	Yes	Yes	Yes	Yes
E35	Venting Error	Yes	Yes	Yes	Yes	Yes	Yes
E36	Steam Temp High	N/A	Yes	No	No	Yes	No
E80	ID Error	Yes	Yes	Yes	Yes	Yes	Yes
E81	Program Memory Error	Yes	Yes	Yes	Yes	Yes	Yes
E82	WP Error	Yes	Yes	Yes	Yes	Yes	Yes
E83	Algo Error	Yes	Yes	Yes	Yes	Yes	Yes
E96	Connection Error	Yes	Yes	No	No	No	No

3m Общепит
vsezip.ru
+7(812)987-08-81

NOTES

TROUBLESHOOTING TREES

vsezip.ru
+7(812)987-08-81

ES Units 72
K-77 Safety Contactor Does Not Pull-In at Power-Up (380-415V Units Only) 72
Unit Dead — No Display and No Operation 73
Unit Does Not Run When Start Is Pressed 74
No Generator Fill 75
No Steam Pre-Heat 76
No Steam Production in Steam Mode 77
No Heat in Convection Mode 78
No Steam Production in Combination Mode 79
No Convection Heat in Combination Mode 80
Motor Does Not Run When K-51 Motor Contactor Is Energized ... 81

ESi Units 82
K-77 Safety Contactor Does Not Pull-In at Power-Up (380-415V Units Only) 82
Unit Dead — No Display and No Operation 83
Unit Does Not Run When Start Is Pressed 84
No Steam Production in Steam Mode 85
No Heat in Convection Mode 86
No Steam Production in Combination Mode 87
No Convection Heat in Combination Mode 88
No Smoke Production When Smoke Is Selected in Convection 89
No Motor Operation 90

Return to Main Table of Contents 3

NOTE: Troubleshooting Guides reflect all counter top models. When working on a 20.20 there are additional elements, motors, and contactors. The following components are wired to operate together on a 20.20:

- K-41 and K-43 Convection Element Contactors
- K-42 and K-44 Convection Element Contactors
- K-51 and K-71 High Speed Motor Contactors
- K-52 and K-72 Low Speed Motor Contactors

TROUBLESHOOTING TREES

3кл Общепит

ES — K-77 Safety Contactor Does Not Pull-In at Power-Up (380-415V Units Only)

vsezip.ru

+7(812)987-08-81

NOTE: 380-145V units will not heat if K-77 is not pulled in.

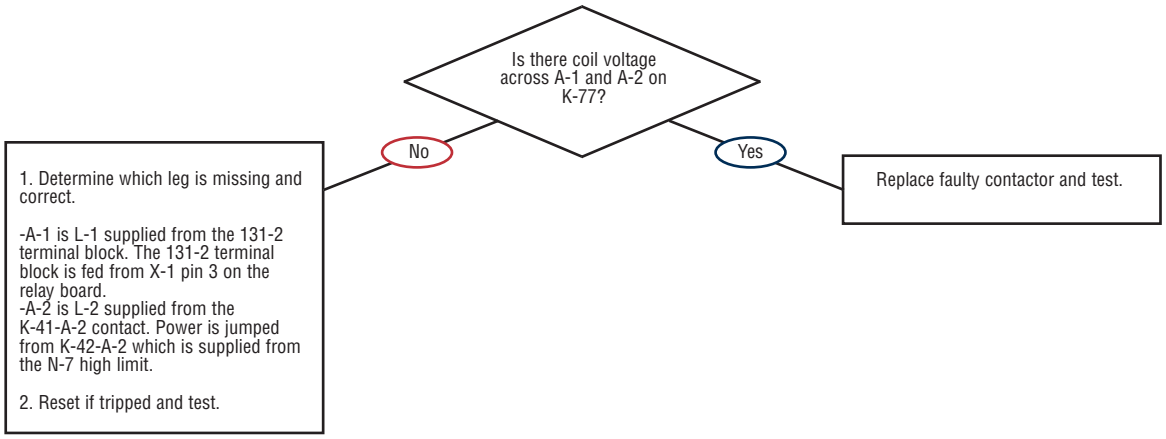

Sun Oct 2007
vsezip.ru
+7(812)987-08-81

ES — Unit Dead — No Display and No Operation

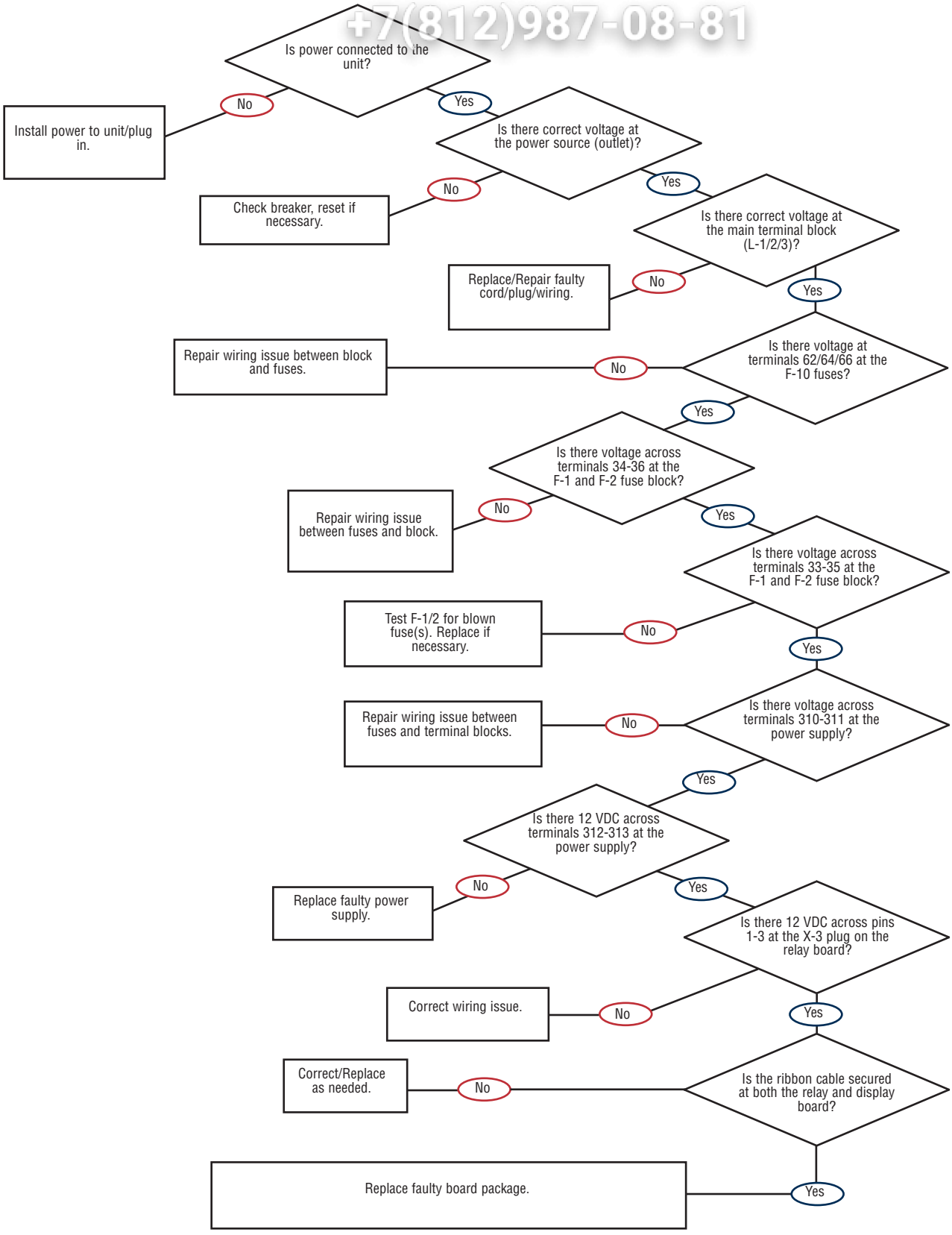

Зип Объединит
vsezip.ru
+7(812)987-08-81

ES — Unit Does Not Run When Start Is Pressed

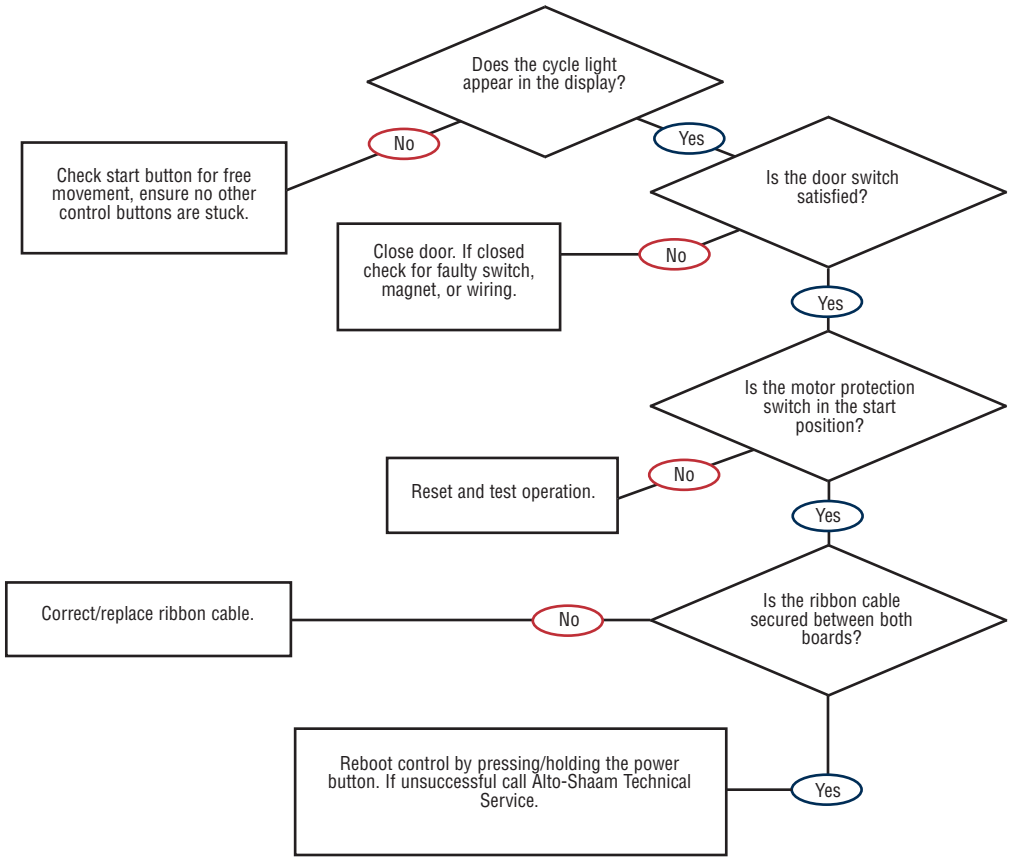

Электронный архив
vsezip.ru
+7(812)987-08-81

ES — No Generator Fill

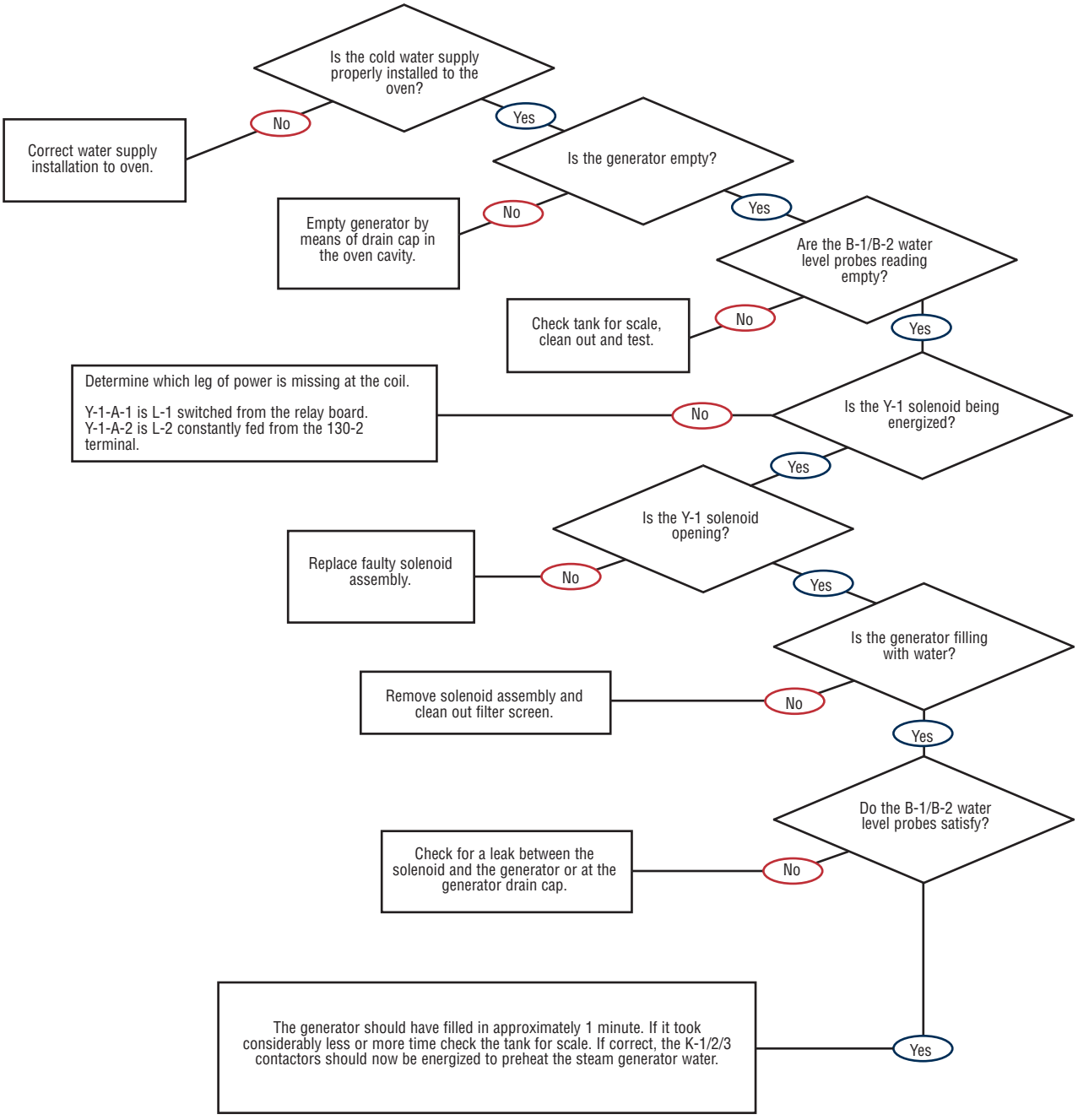

ES — No Steam Pre-Heat

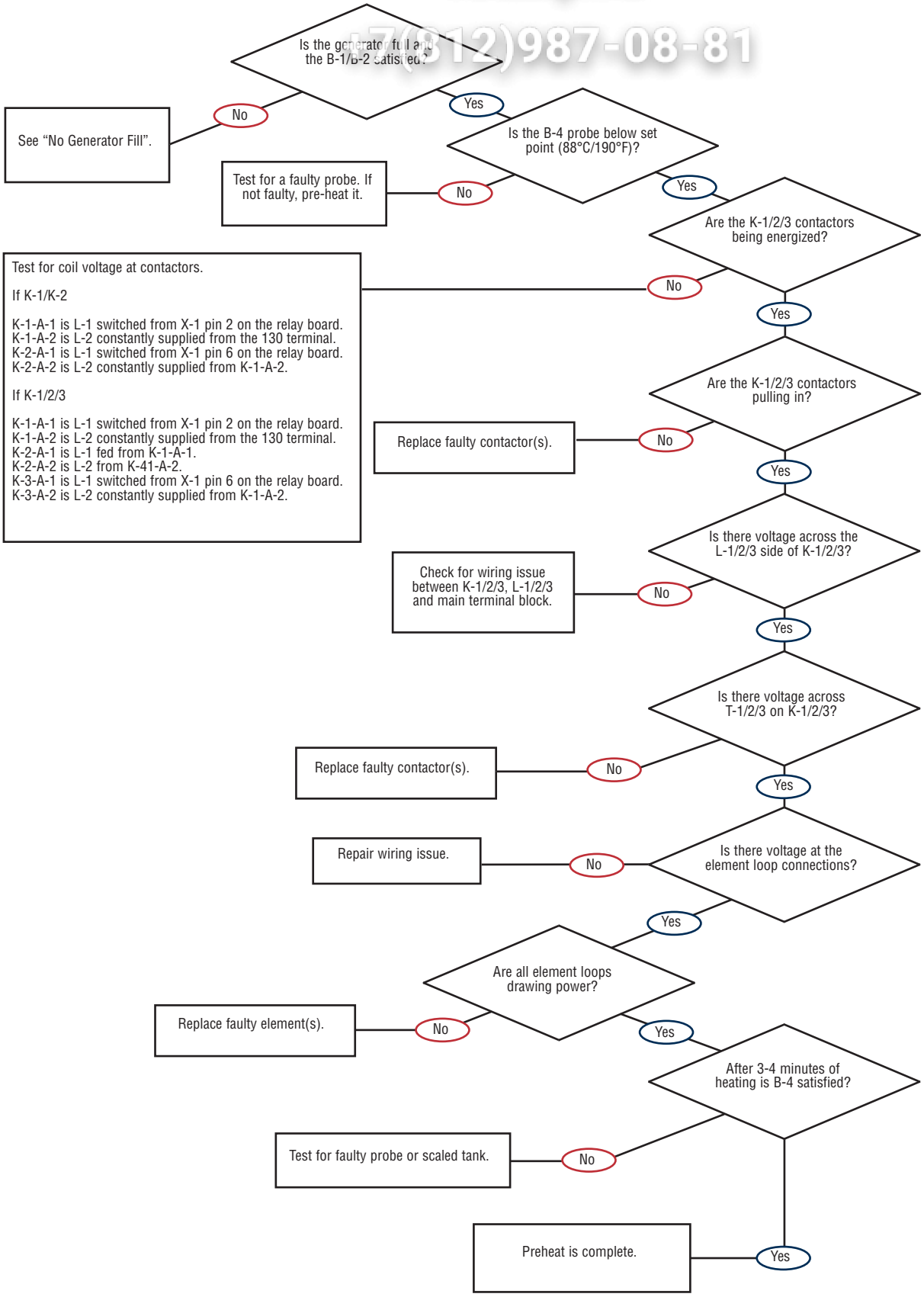

Sub Общепит
vsezip.ru
+7(812)987-08-81

ES — No Steam Production in Steam Mode

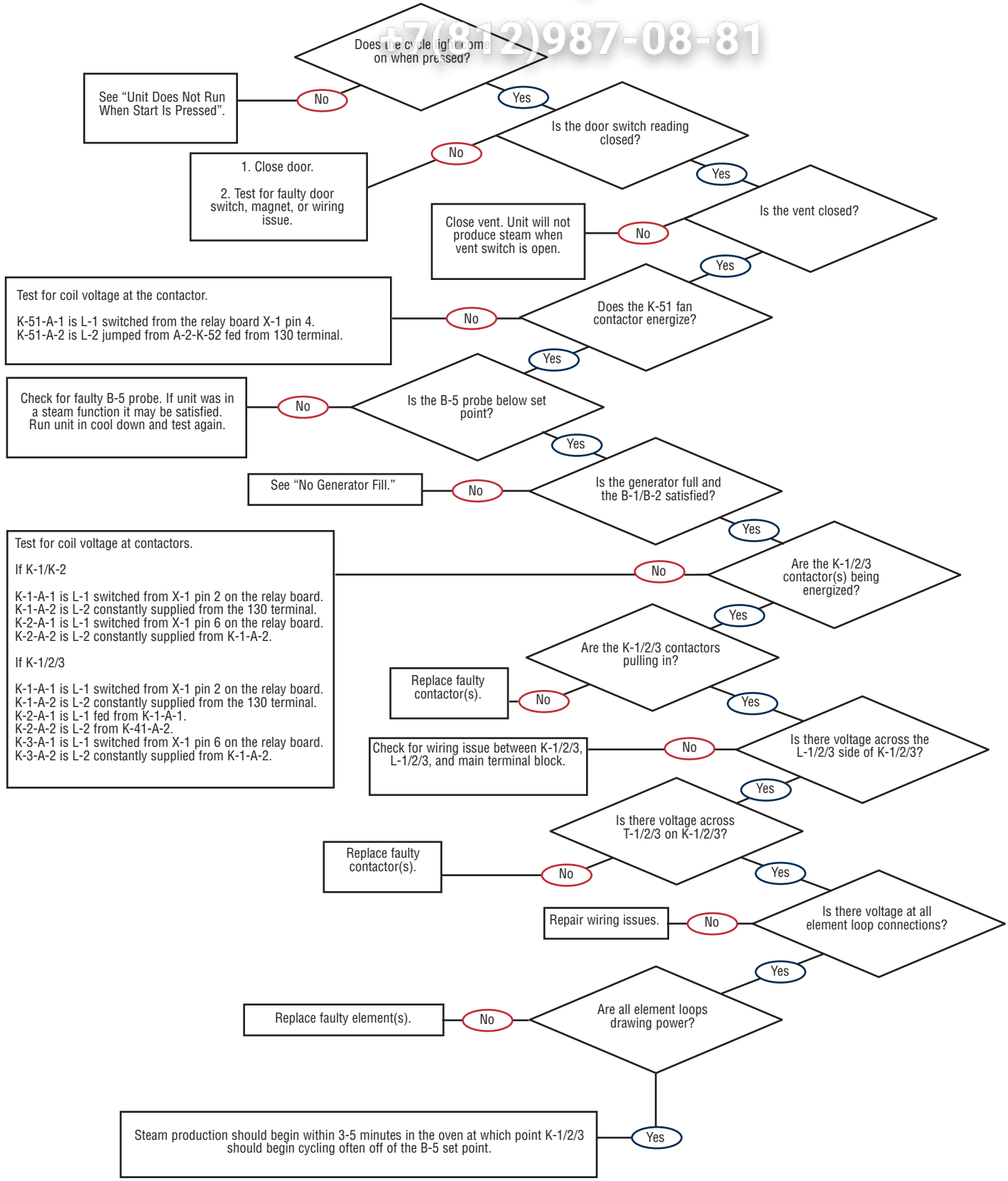

ES — No Heat in Convection Mode

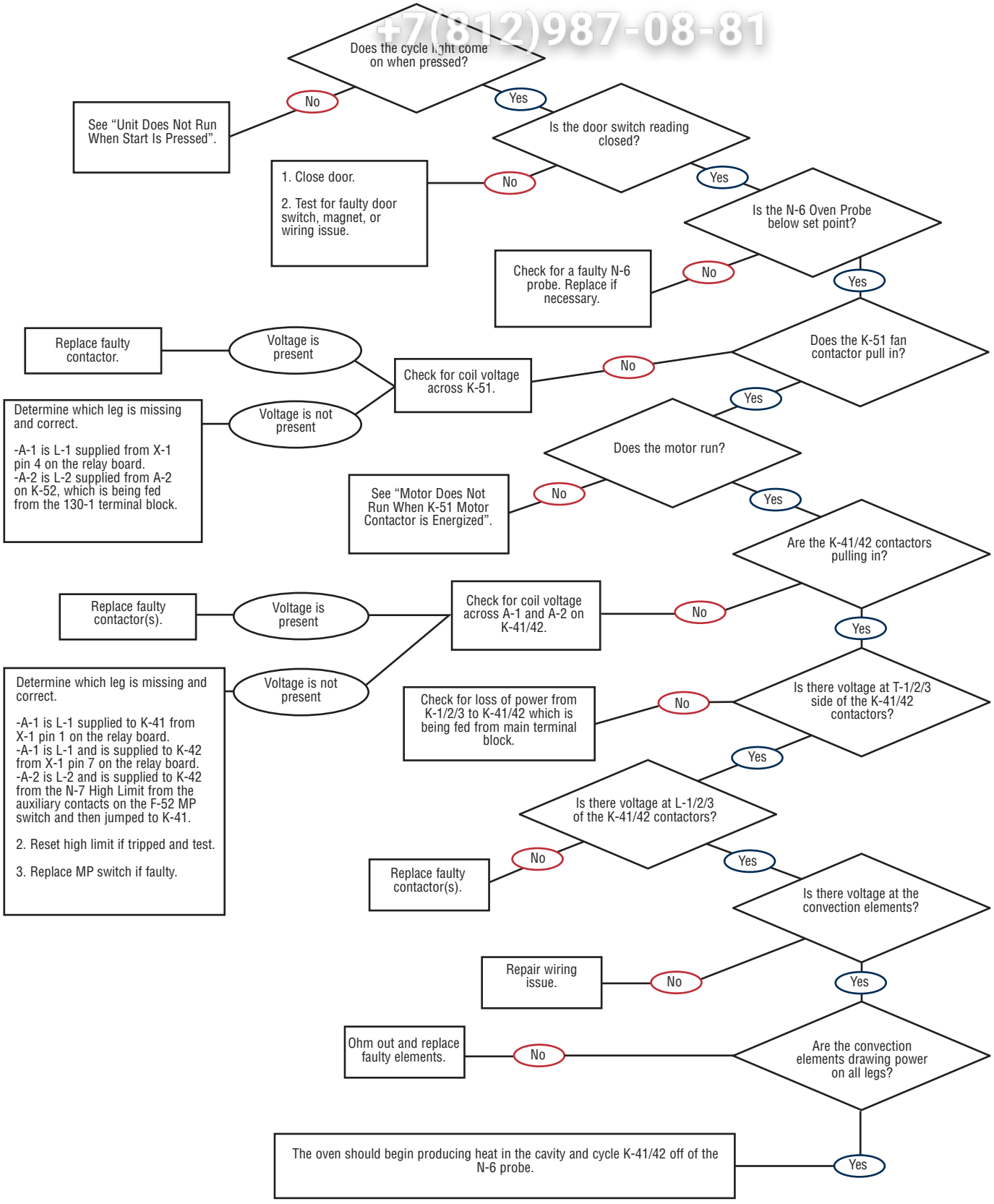

Sun Oct 2 2011
vsezip.ru
+7(812)987-08-81

ES — No Steam Production in Combination Mode

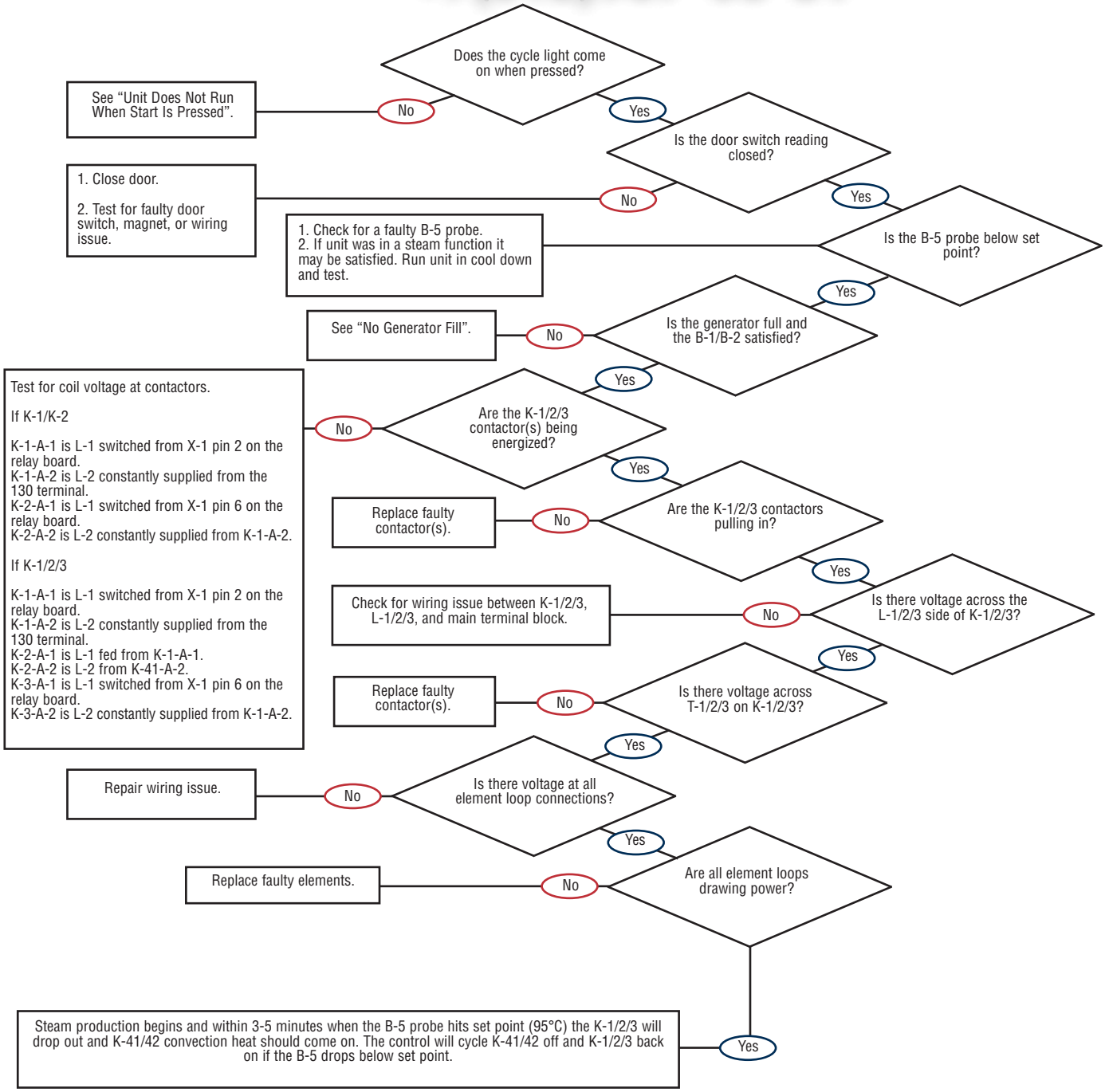

ES — No Convection Heat in Combination Mode

Зип Обещает
vsezip.ru
+7(812)987-08-81

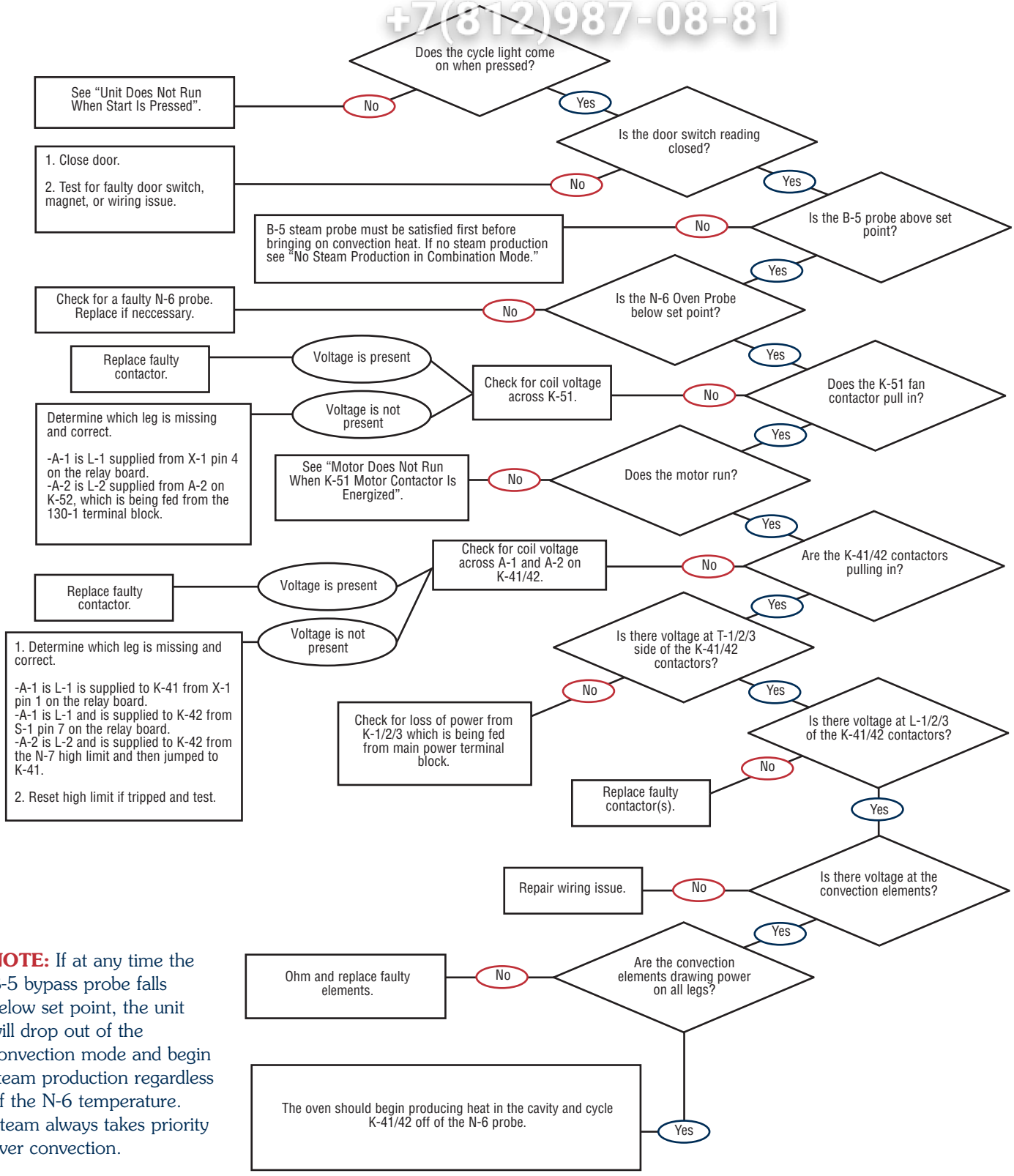

NOTE: If at any time the B-5 bypass probe falls below set point, the unit will drop out of the convection mode and begin steam production regardless of the N-6 temperature. Steam always takes priority over convection.

Электронный архив
vsezip.ru
+7(812)987-08-81

ES — Motor Does Not Run When K-51 Motor Contactor Is Energized

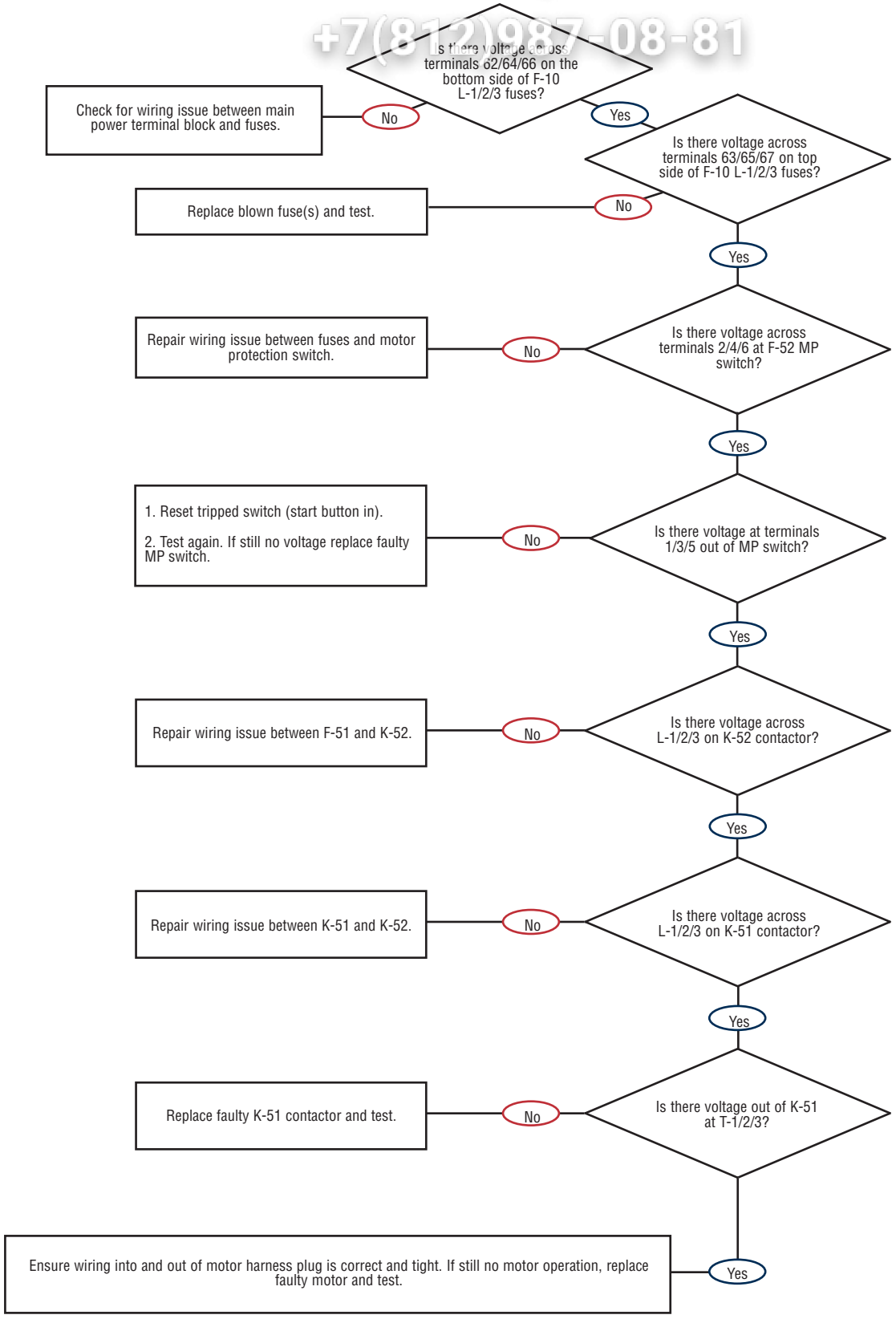

TROUBLESHOOTING TREES

Зип Общепит
vsezip.ru
+7(812)987-08-81

ESi — K-77 Safety Contactor Does Not Pull-In at Power-Up (380-415V Units Only)

NOTE: 380-145V units will not heat if K-77 is not pulled in.

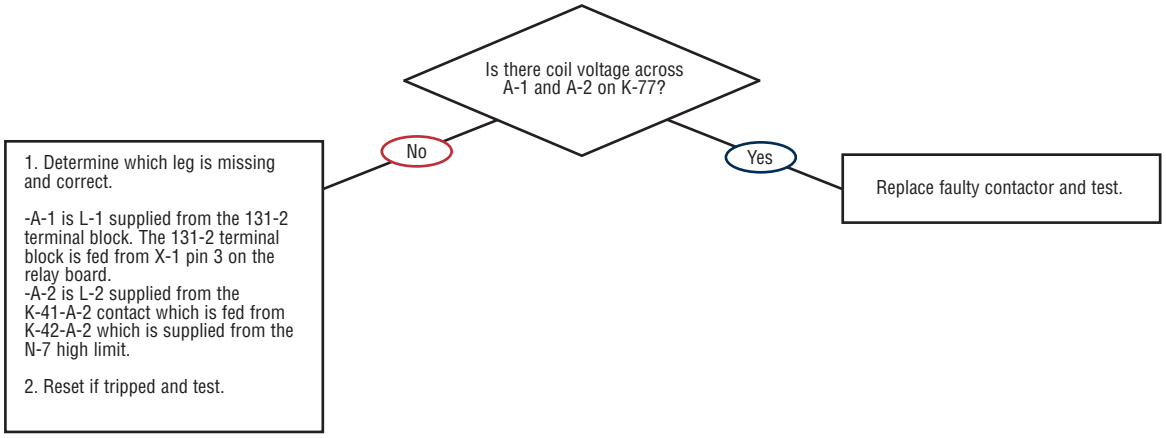

Sun Oil Team
vsezip.ru
+7(812)987-08-81

ESi — Unit Dead — No Display and No Operation

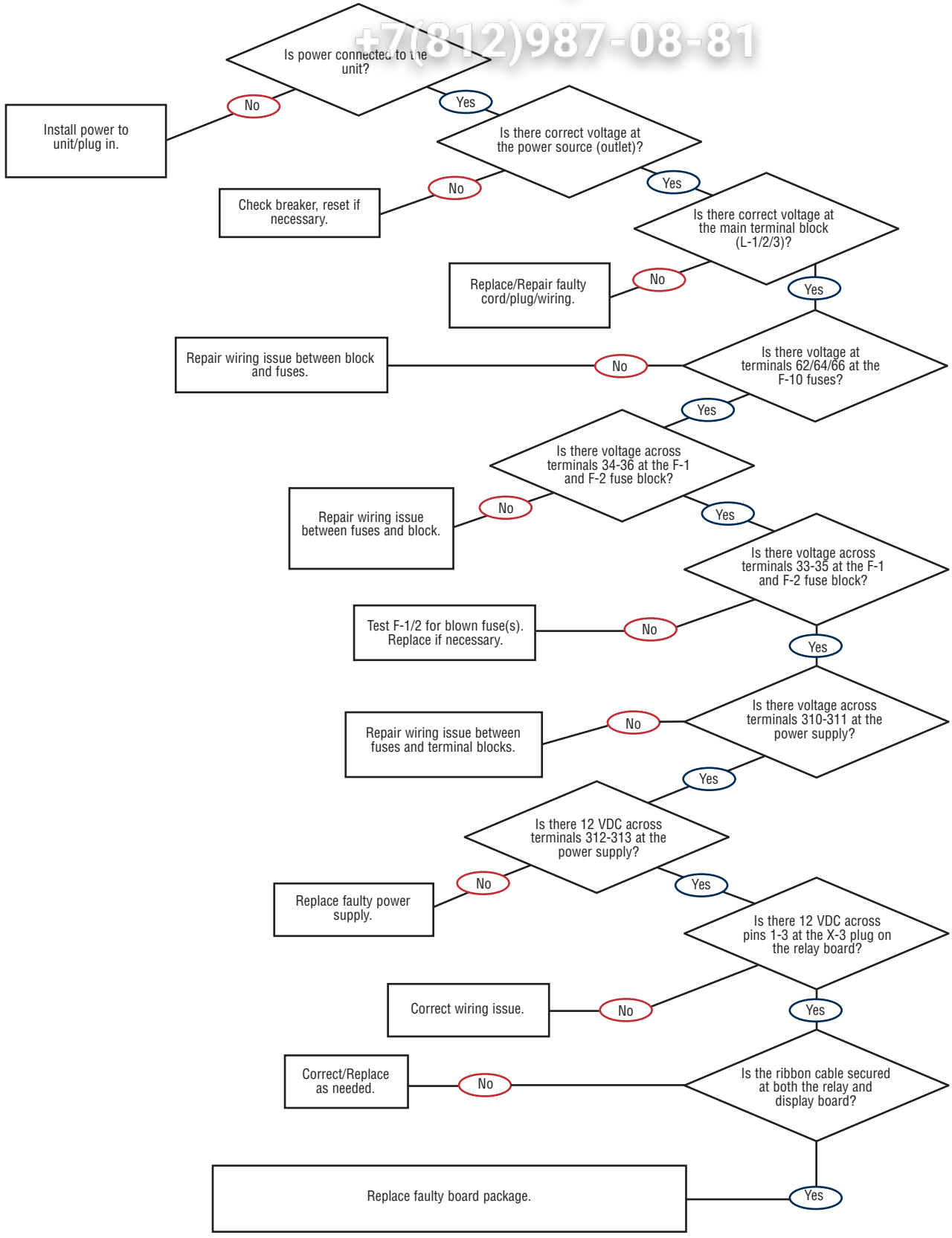

TROUBLESHOOTING TREES

Зип Обрезит
vsezip.ru
+7(812)987-08-81

ESi — Unit Does Not Run When Start Is Pressed

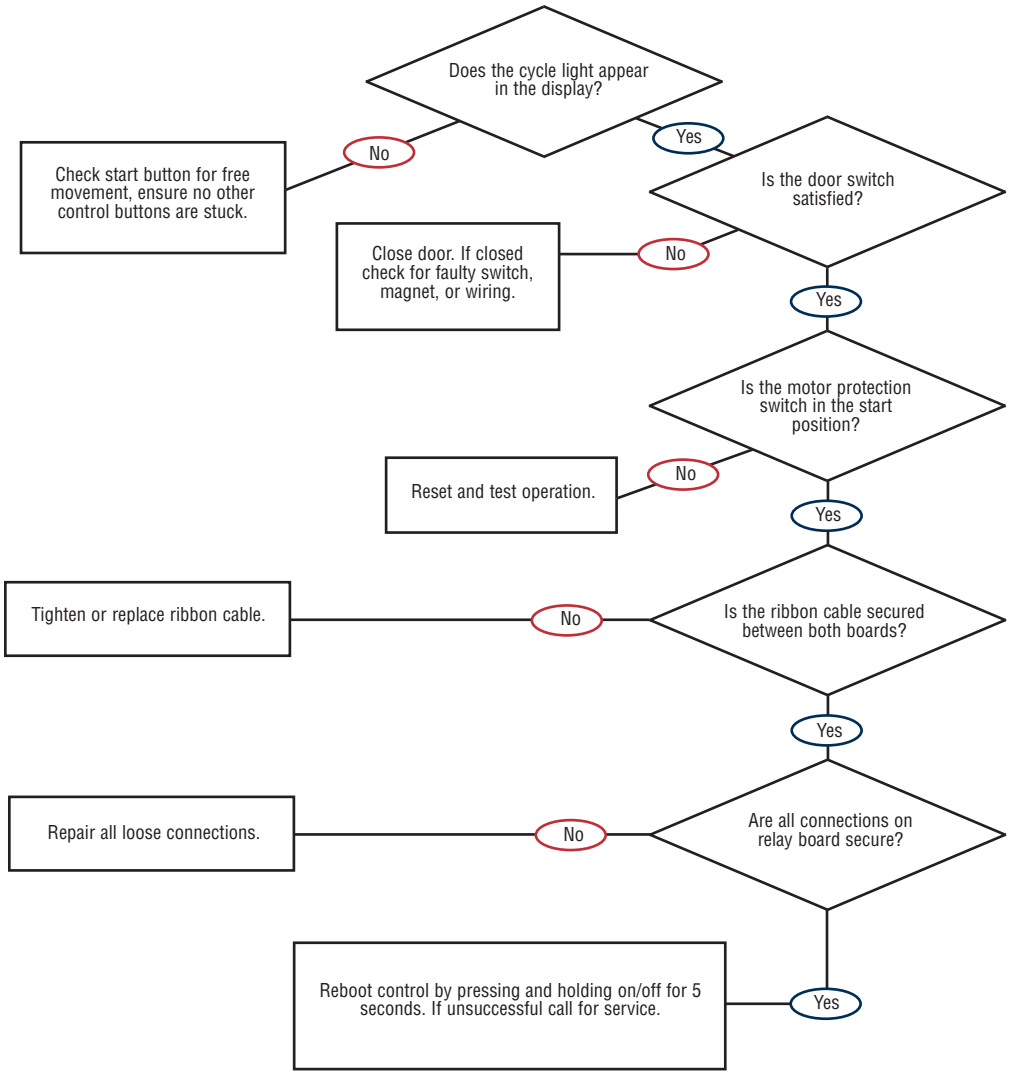

Электронный
vsezip.ru
+7(812)987-08-81

ESi — No Steam Production in Steam Mode

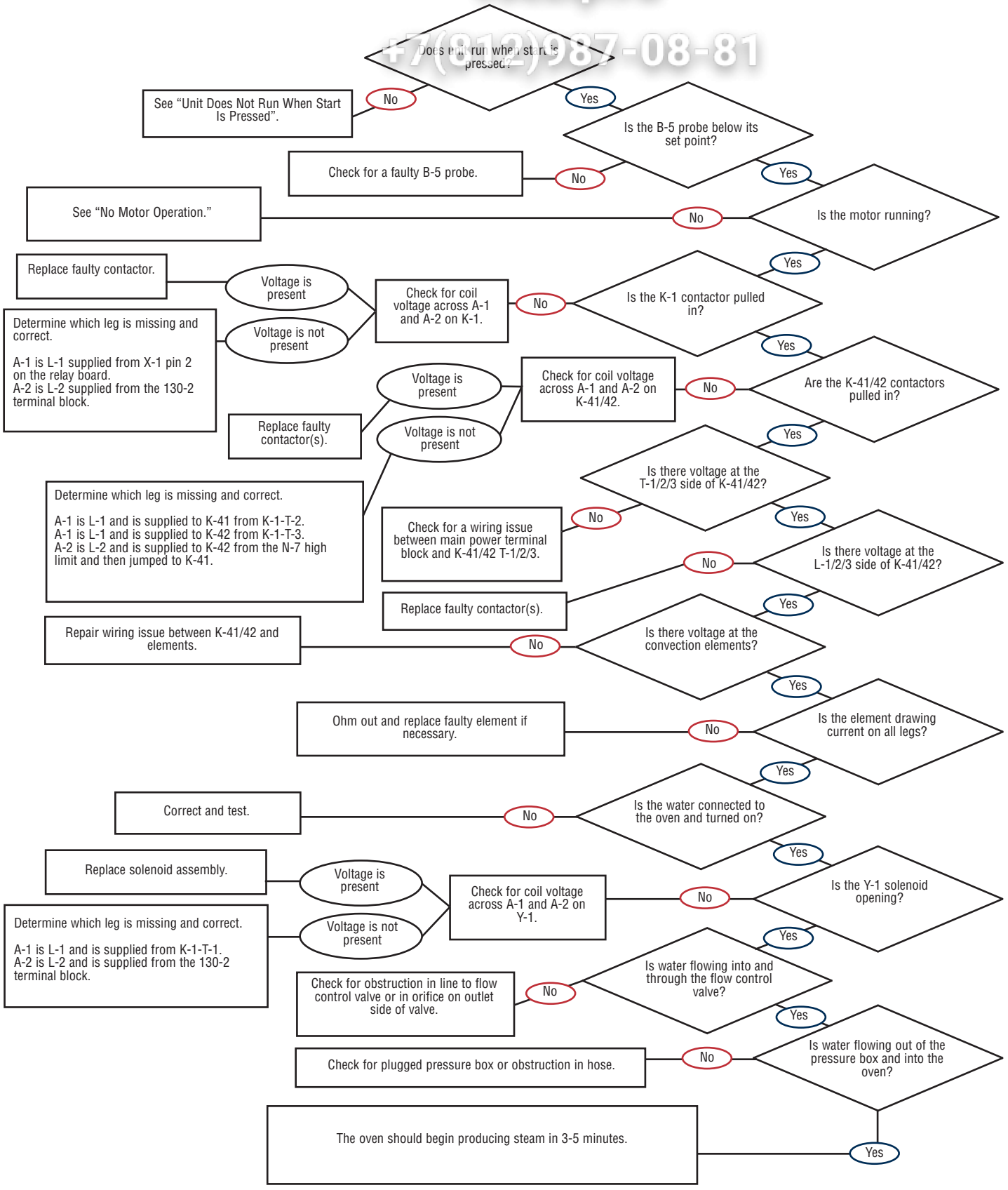

ESi — No Heat in Convection Mode

Зип Объединит
vsezip.ru
+7(812)987-08-81

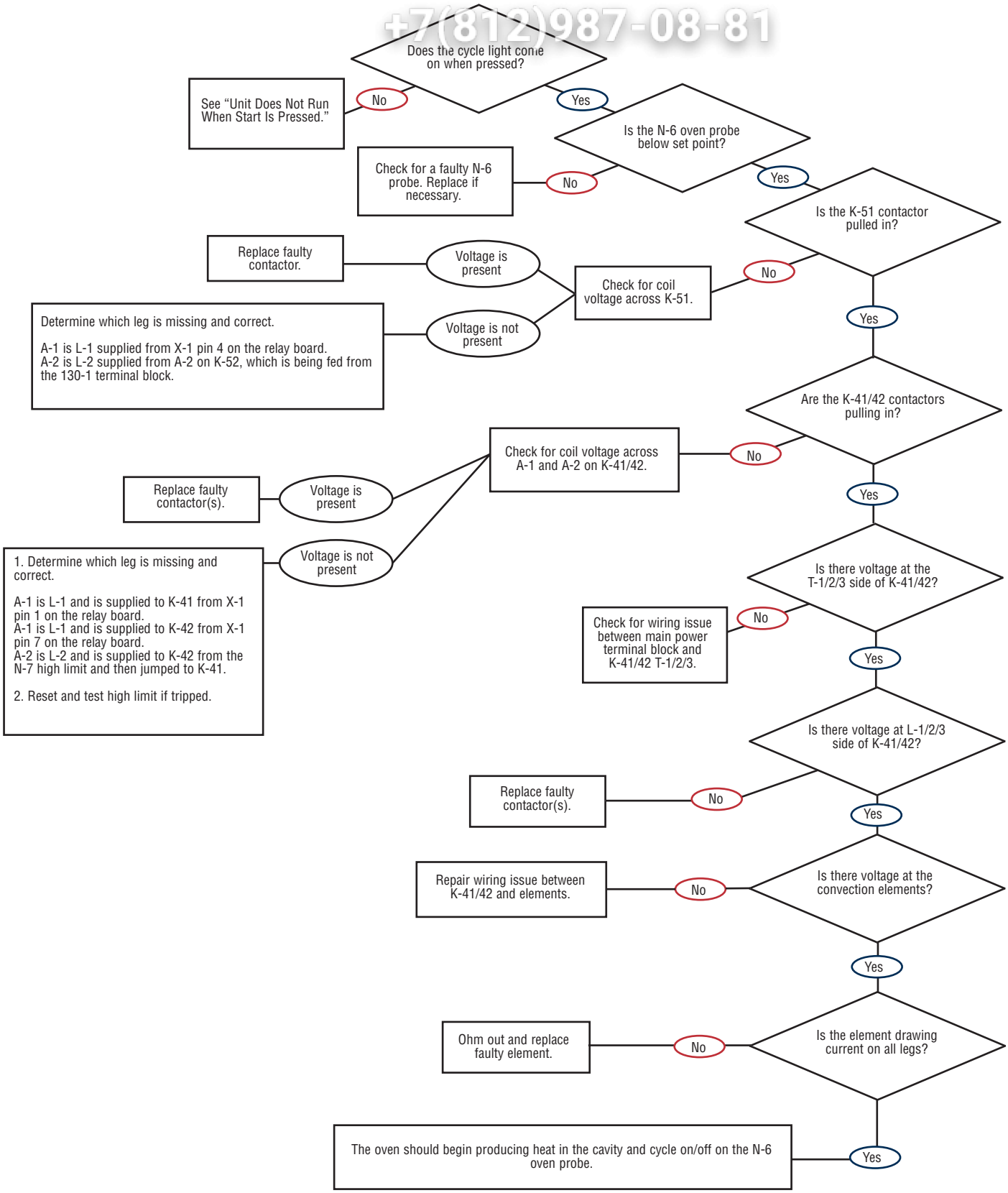

Sub Ocean
vsezip.ru
+7(812)987-08-81

ESi — No Steam Production in Combination Mode

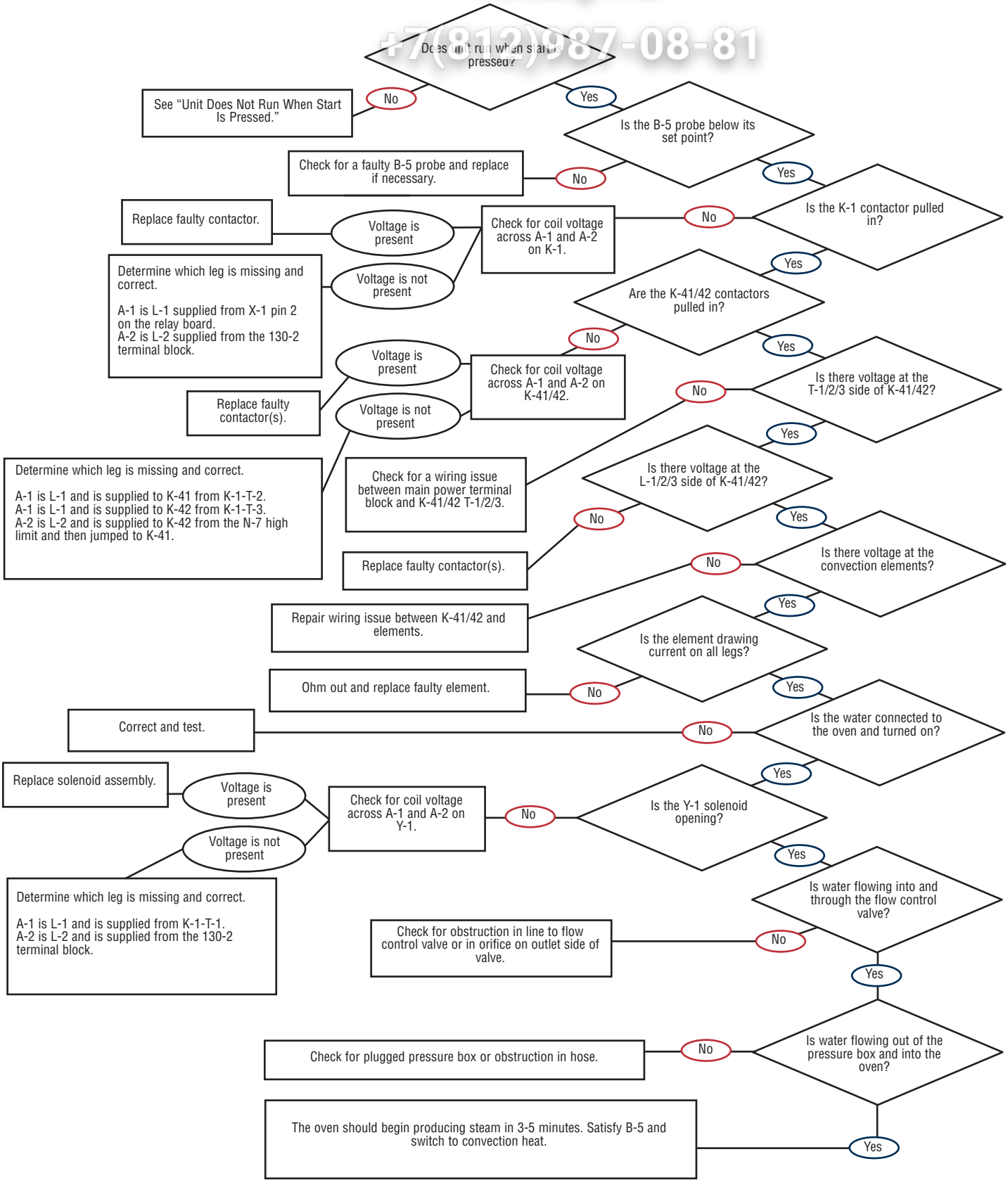

TROUBLESHOOTING TREES

ESi — No Convection Heat in Combination Mode

Зип Общепит
vsezip.ru
+7(812)987-08-81

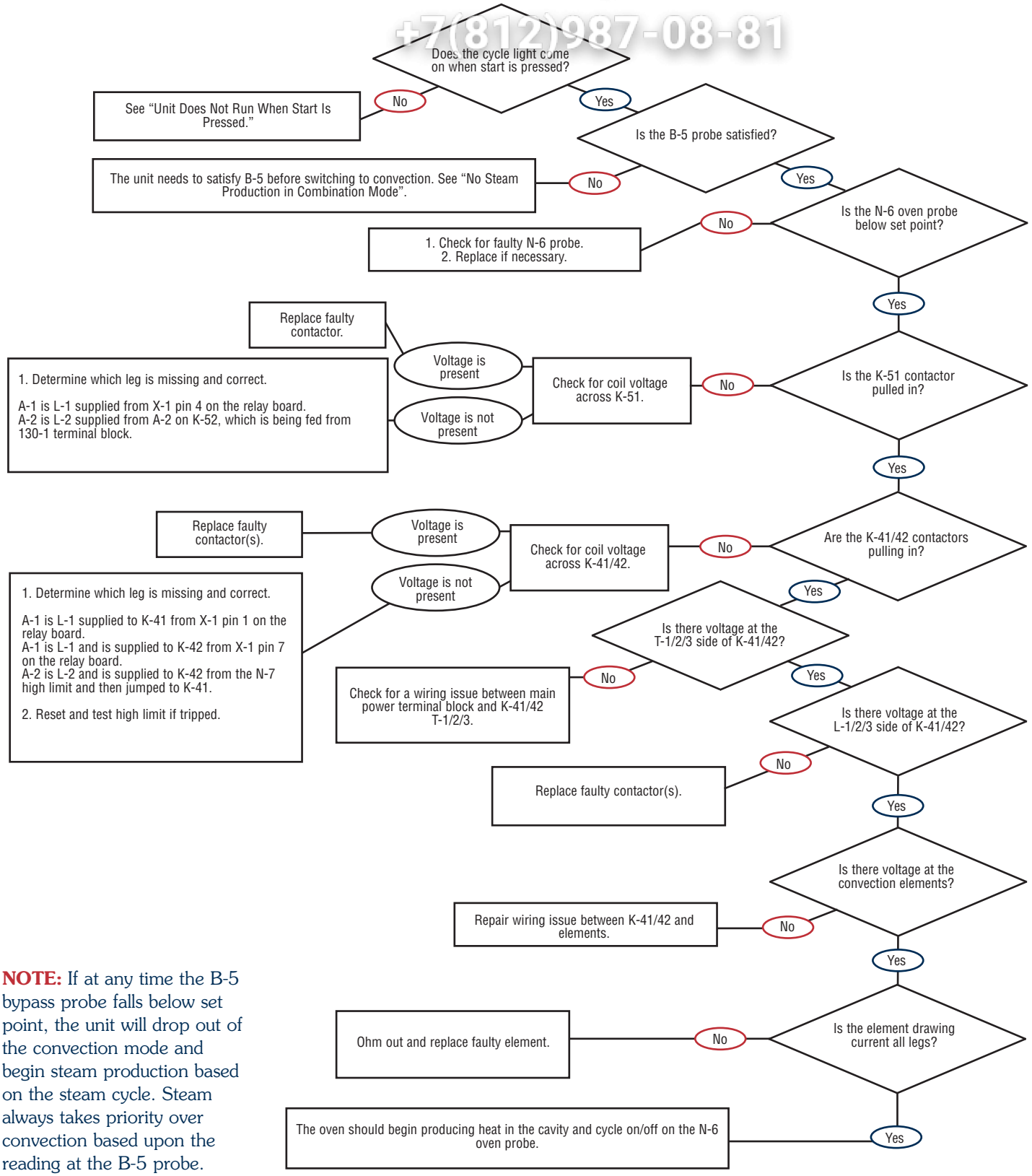

NOTE: If at any time the B-5 bypass probe falls below set point, the unit will drop out of the convection mode and begin steam production based on the steam cycle. Steam always takes priority over convection based upon the reading at the B-5 probe.

Электронный
vsezip.ru
+7(812)987-08-81

ESi — No Smoke Production When Smoke Is Selected in Convection

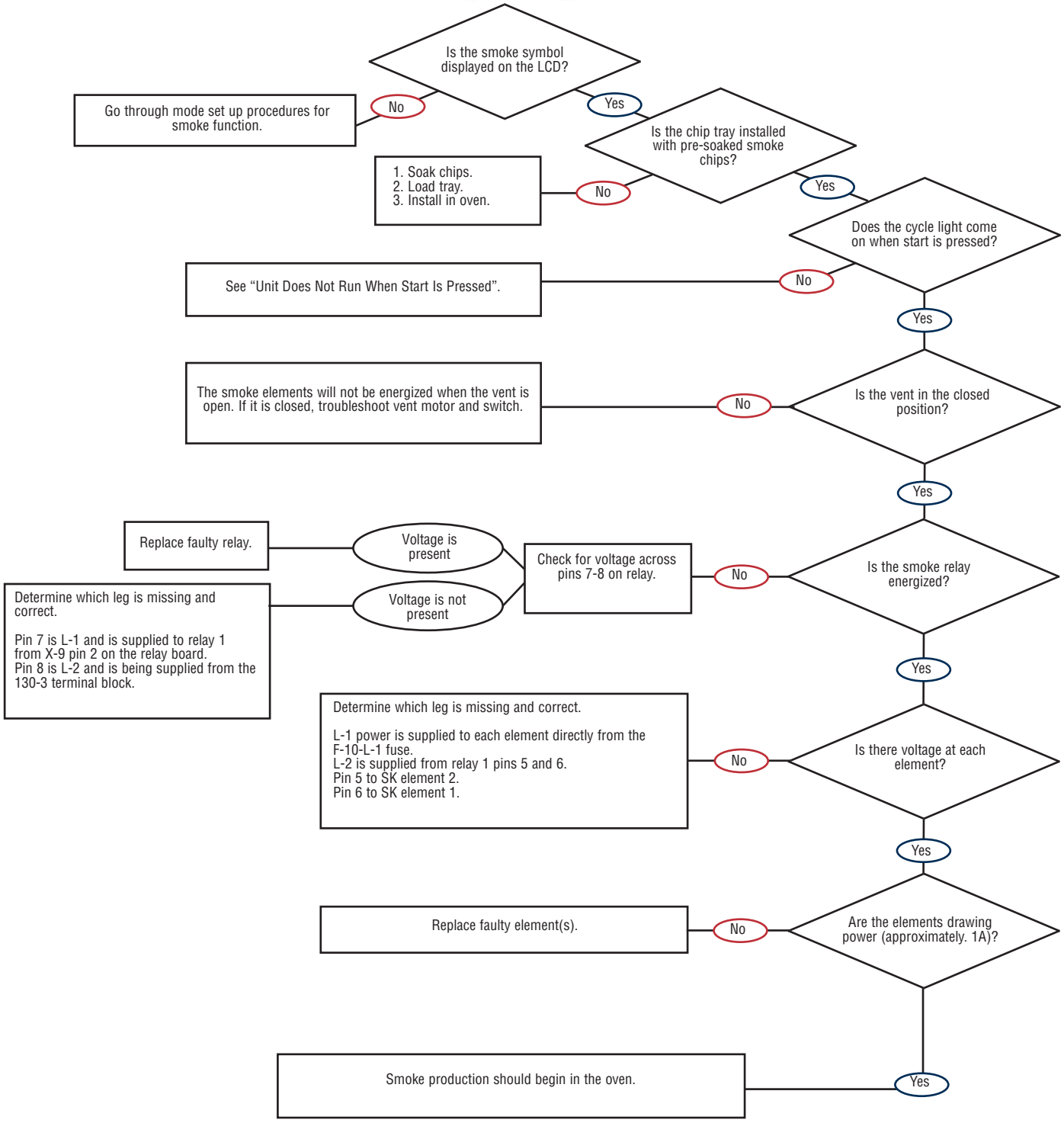

Зип Обещает
vsezip.ru
+7(812)987-08-81

ESi — No Motor Operation

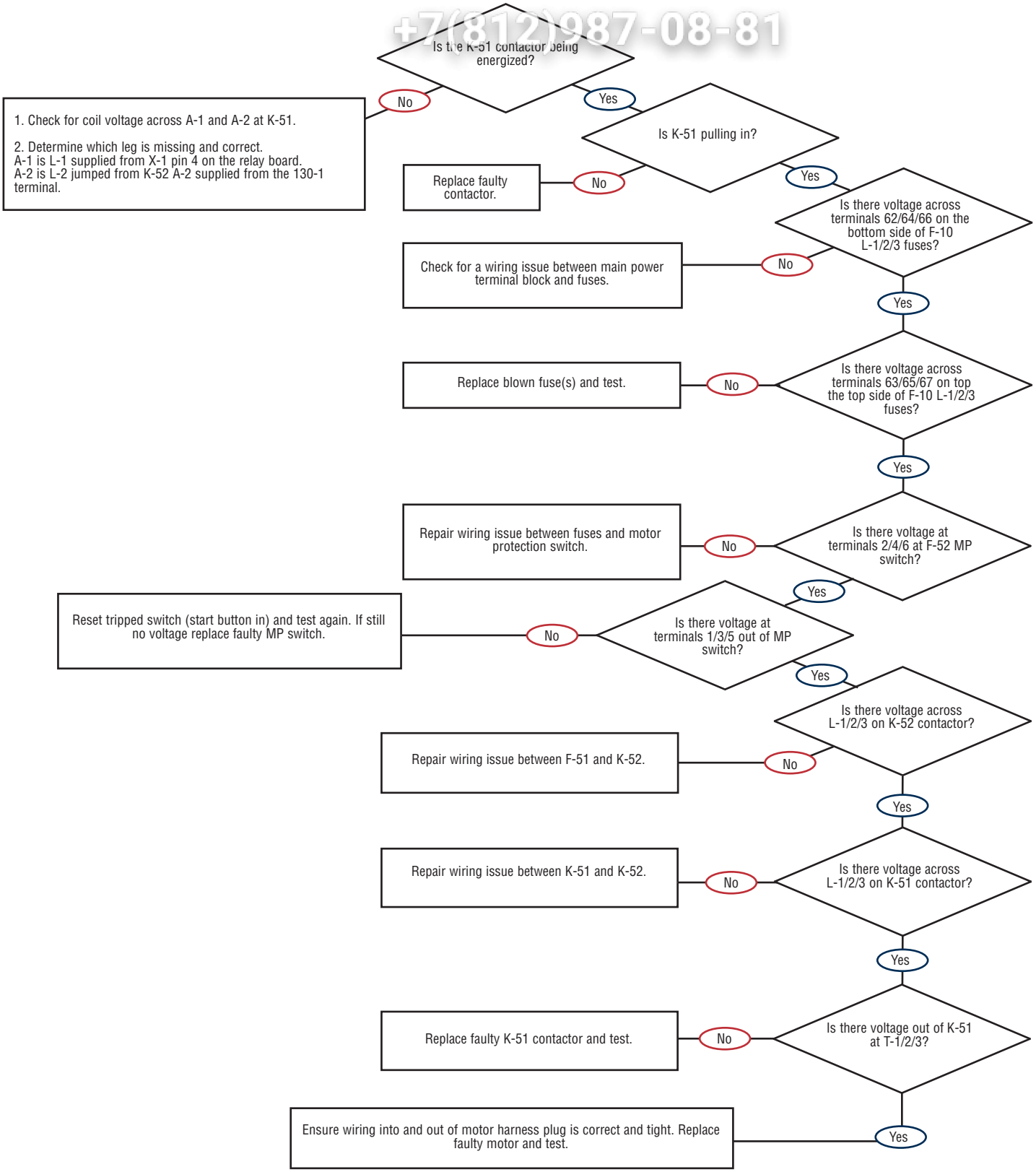

Зип Общепит
vsezip.ru
+7(812)987-08-81

COMBITHERM PARTS

ES Rear Service Parts 92
ES Left-Hand Side Service Parts 93
ES Condensation Tank 94
ESi Rear Service Parts 95
ESi Left-Hand Side Service Parts 96
ESi Condensation Tank 97
Sprayer Holder Assembly 98
Oven Light Assembly 98
Top Hinge Assembly 98
Basic Control 99
Deluxe Control 100
Simple Control 101
Combitherm Motor 102

For model-specific parts, see Parts Information for:

6.10 ES 103
6.10 ESi 117
6.10 ESiN 131
10.10 ES 145
10.10 ESi 159
10.10 ESiN 173
7.14 ES 187
7.14 ESi 203
10.18 ES 217
10.18 ESi 229

Return to Main Table of Contents 3

ЗипОбщепит
vsezip.ru
+7(812)987-08-81

ES REAR SERVICE PARTS

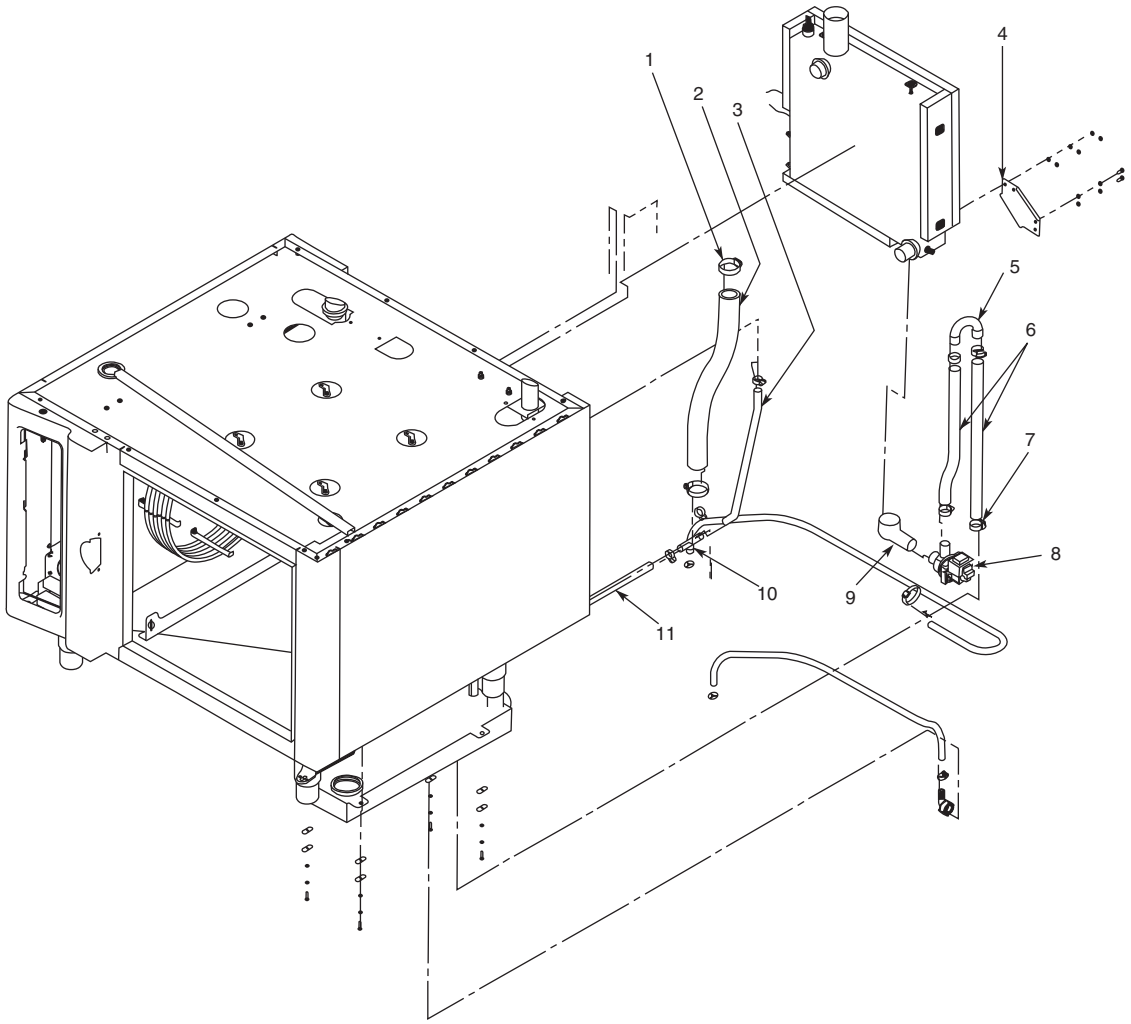

Item	Part	Description
1	CM-22794	Clamp
2	HO-27891	Hose, 1-7/8" Dia.
3	HO-2957	Hose
4	1000719	Pump Bracket
5	PB-26512	Plumbing Probe
6	HO-27892	Hose, 7/8" Dia.
7	CM-27190	Tube Clamp
8	DA-24973	Drain Pump
9	EB-25106	Elbow Drain
10	EB-22221	Elbow
11	HO-2957	Hose

Зип Общепит
vsezip.ru
+7(812)987-08-81

ES LEFT-HAND SIDE SERVICE PARTS

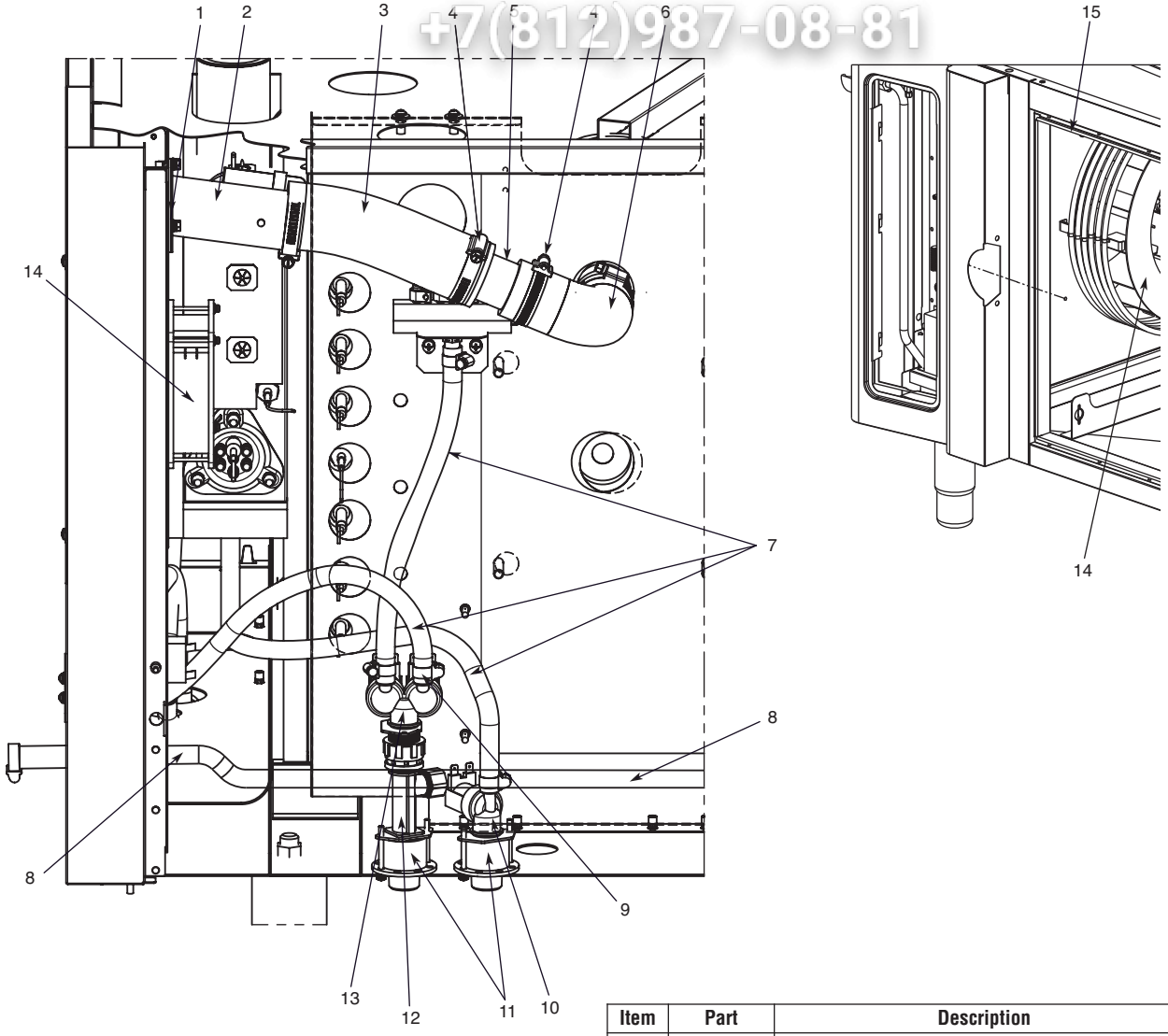

Item	Part	Description	Qty.
1	SA-26890	Seal, Pressure Valve	1
2	VA-26838	Vent Assembly	1
3	HO-27891	Hose, Air Intake	1
4	CL-22234	Clamp, Worm Gear	3
5	FT-27406	Fitting	1
6	EB-27207	Elbow	1
7	HO-22255	Hose	3
8	HO-27203	Hose, Hand Shower Connection	1
9	CM-28145	Worm Gear, 1/2"	12
10	VA-34300	Valve, Single Port	1
11	NP-27538	Valve Holder Assembly	1
12	TE-27204	Tee	1
13	VA-34045	Valve, Double Port	1
14	WH-26645	Fan Wheel, 6.10 ES, 10.10 ES, 7.14 ES	1
14	WH-26642	Fan Wheel, 12.20 ES, 20.20 ES	1
15	GS-26636	Gasket, 6.10 ES	1
15	GS-26638	Gasket, 10.10/10.18 ES	1
15	GS-26639	Gasket, 7.14 ES	1
15	GS-26640	Gasket, 12.20 ES	1

ЗипОбщепит
vsezip.ru
+7(812)987-08-81

ES CONDENSATION TANK

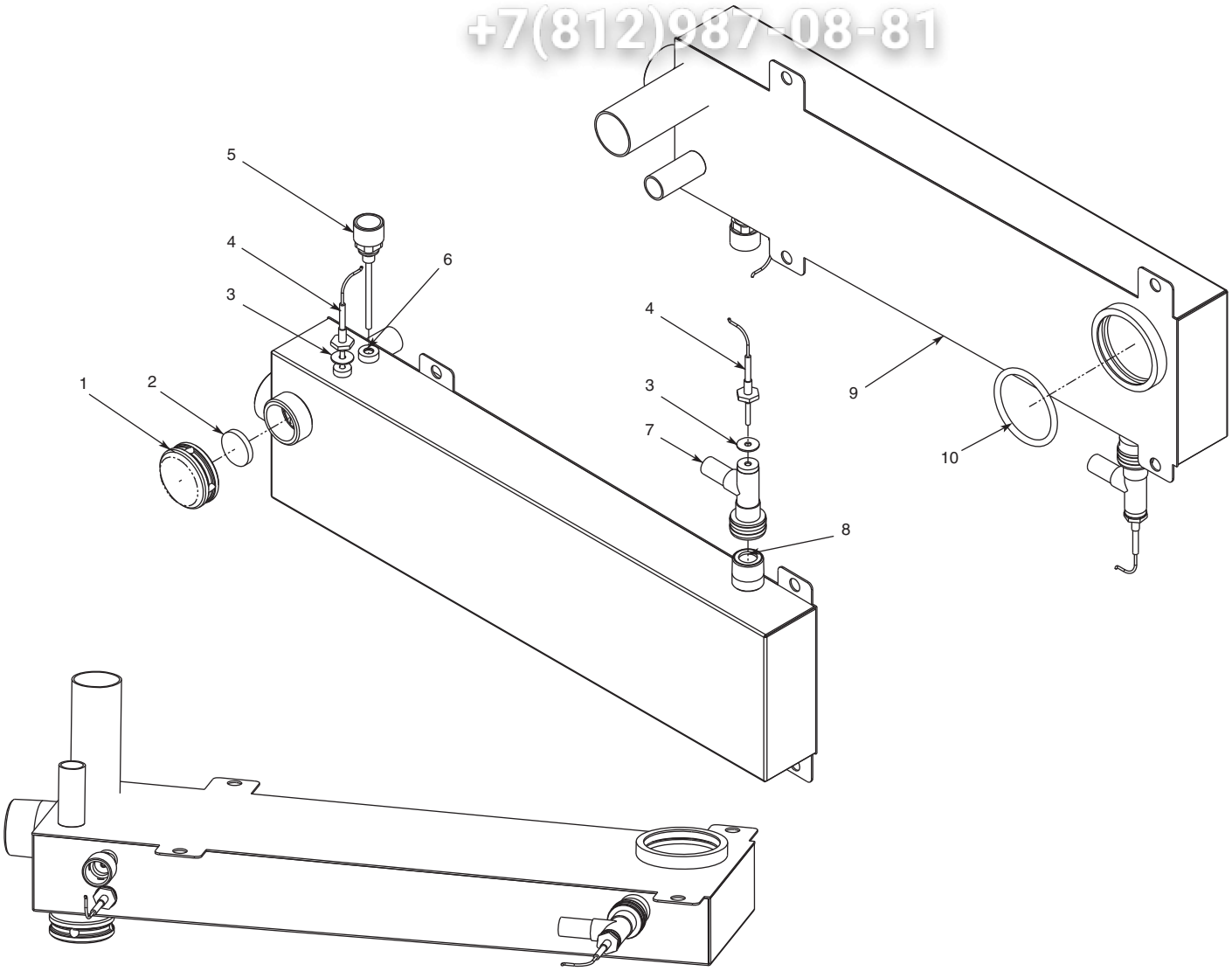

Item	Part	Description	Qty.
1	CP-22758	Outlet, Steam Generator, 303-304 S/S	1
2	WS-22752	Silicone, Seal, 32 mm FDA, 500F Temp.	1
3	SA-25061	CT, T-Couple Probe, ML Combi	2
4	PR-33751	CT, ML Combi, Thermocouple, 3050 mm Wire Length, ML Combi	2
5	5000284	Inject, Nozzle Condensor Weld	1
6	SA-22209	O-Ring, 8 x 3 mm V75 Vitan 75 Durometer	1
7	PB-26512	Measure Probe	1
8	WS-22207	CT, Seal, 3/4 x 2, Flat Vulcan Fiber	1
9	5004529	Condensor Tank Welding	1
10	SA-22212	CT, O-Ring, Red, Silicone 70 Dur, 225C, 59.6 x 5.33 mm	1

ЗипОбщепит
vsezip.ru
+7(812)987-08-81

ESi REAR SERVICE PARTS

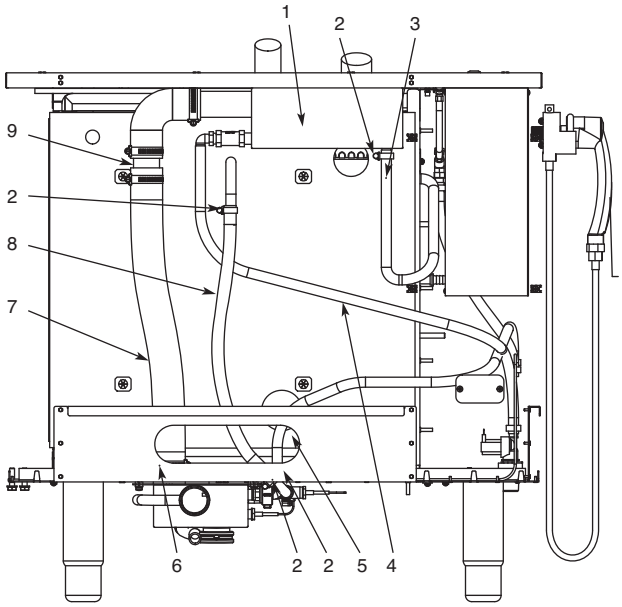

Item	Part	Description	Qty.
1	5005009	Pressure Box Assembly	1
2	FT-28124	Worm Gear, 1/2"	13
3	HO-27893	Hose, Injector	1
4	HO-22255	Hose, Pressure Box	1
5	HO-27890	Hose, Condenser Cooling	1
6	CL-22234	Clamp, Worm Gear, 40-60, Hose	8
7	HO-27891	Hose, Condenser	1
8	HO-27893	Hose, Bypass	1
9	FT-27406	Vent, Condensate Tank	2

ЗиП Общепит
vsezip.ru
+7(812)987-08-81

ESi LEFT-HAND SIDE SERVICE PARTS

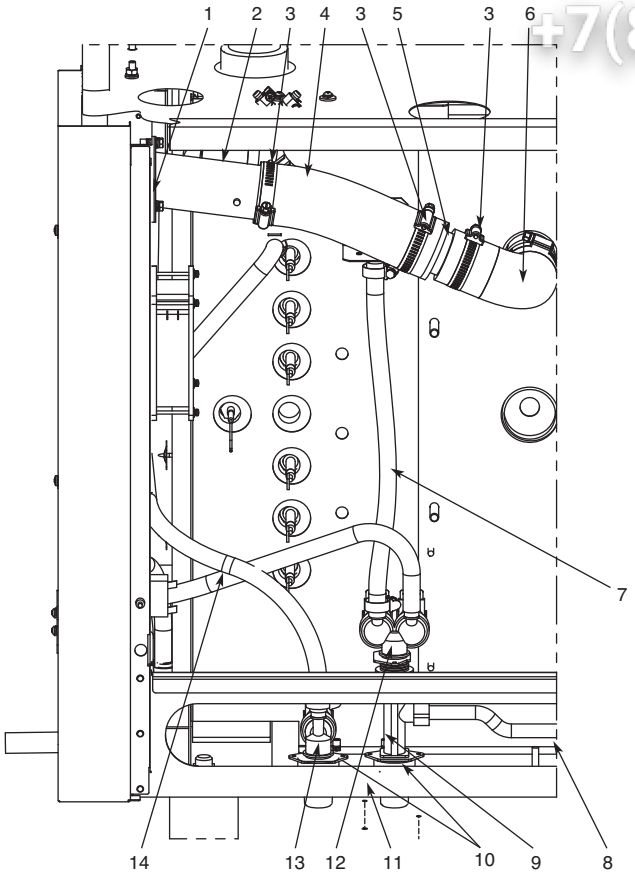

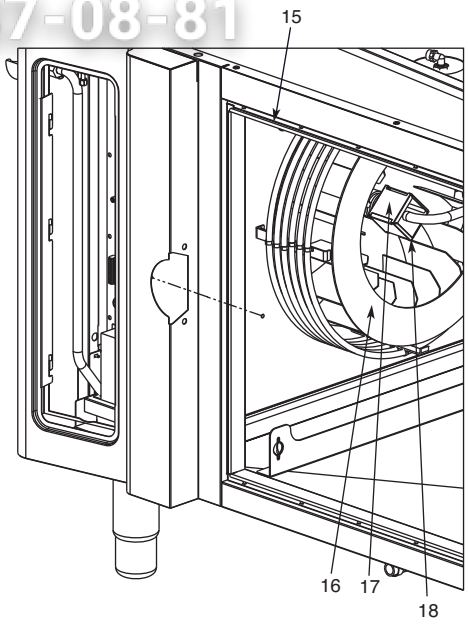

Item	Part	Description	Qty.
1	SA-26890	Seal, Pressure Valve	1
2	VA-26838	Pressure Valve	1
3	CL-22234	Clamp, Worm Gear, 40-60, Hose	8
4	HO-27891	Hose, Air Intake	1
5	FT-27406	Vent, Condensate Tank	2
6	EB-27207	Washer Drain Support	2
7	HO-22255	Cleaning Hose	1
8	HO-27203	Hose, Hand Shower Connection	1
9	TE-27204	Connector	1
10	NP-27538	Valve Holder Assembly	2
11	NU-22286	M4-0.7 Hex Nut 18-8	4
12	VA-34045	Valve, Double Port	1
13	VA-34300	Valve, Single Port	1
14	HO-22255	Hose, Pressure Box	1
15	GS-26635	Gasket, 6.10 ESiN	1
15	GS-26636	Gasket, 6.10 ESi	1
15	GS-26637	Gasket, 10.10 ESiN	1
15	GS-26638	Gasket, 10.10/10.18 ESi	1
15	GS-26639	Gasket, 7.14 ESi	1
16	WH-26645	Fan Wheel, 6.10 ESi, 10.10 ESi, 7.14 ESi, 10.18 ESi	1
17	SC-23737	M5 X 10, Hex, HD Cap #18-8, No Slot	1
18	1001204	Disintegration Box	1

ЗипОбщепит
vsezip.ru
+7(812)987-08-81

ESi CONDENSATION TANK

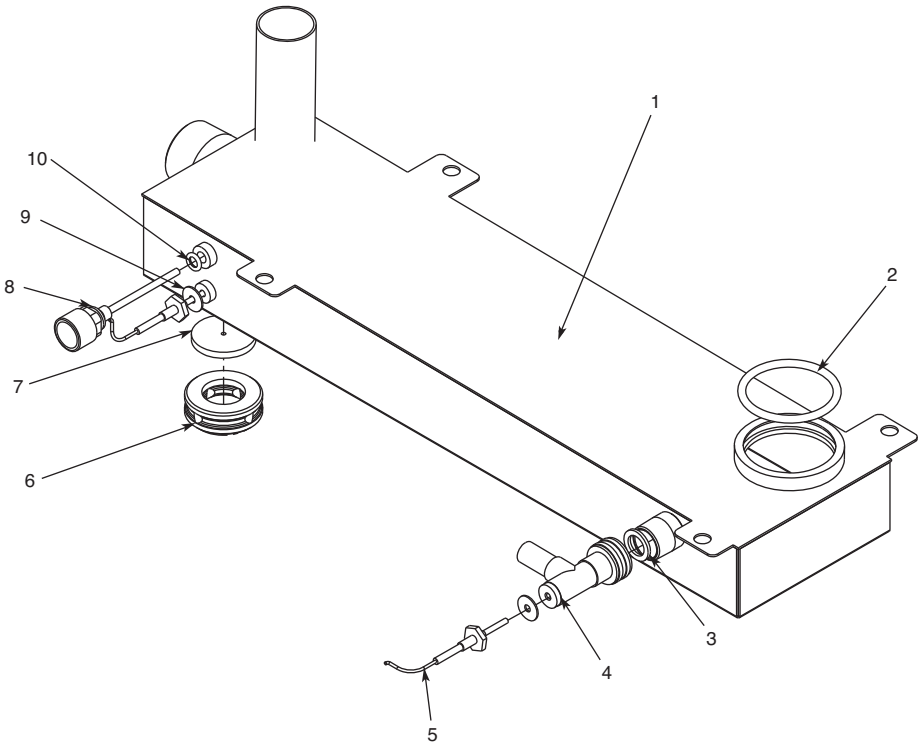

Item	Part	Description	Qty.
1	5007092	Condensor Tank	1
2	SA-22212	CT, O-Ring, Red, Silicone 70 Dur., 225 C, 59.6 x 5.33 mm	1
3	WS-22207	CT, Seal, 3/4 x 2, Flat Vulcan Fiber	1
4	PB-26512	Measure Probe	1
5	PR-33751	CT, ML Combitherm, Thermocouple, 3050 mm Wire Length, ML Combitherm	2
6	CP-22758	Outlet, Steam Generator, 303-304 S/S	1
7	WS-22751	Silicone, Seal, 45 mm FDA, 500 F Temp.	1
8	5000284	Injection Nozzle	1
9	SA-25061	CT, T-Couple Probe, ML Combitherm	2
10	SA-22209	O-Ring, 8 x 3 mm V75 Vitan 75 Durometer	1

ЗиП Общепит
vsezip.ru
+7(812)987-08-81

SPRAYER HOLDER ASSEMBLY

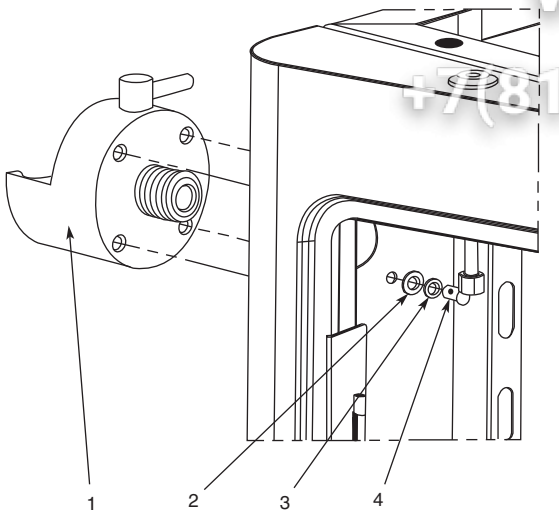

Item	Part	Description	Qty.
1	PB-26960	Hand Shower Holder	1
2	WS-22295	Flat Washer	4
3	WS-22301	Locking Washer	4
4	SC-22766	Philips Screw	4

OVEN LIGHT

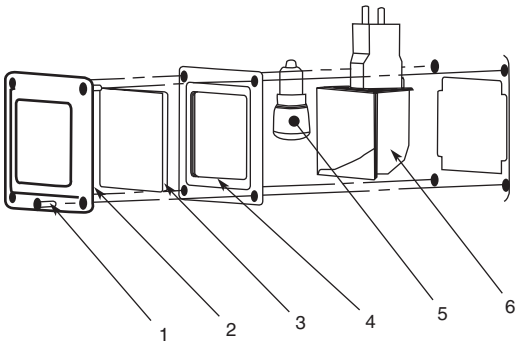

Item	Part	Description	Qty.
1	SC-23141	Screw	4
2	CV-26607	Oven Light Cover	1
3	GL-26608	Oven Light Glass	1
4	GS-26609	Oven Light Gasket	1
5	LP-34206	Light, 15W Bulb	1
6	LP-34161	Light, Snap-In	1

TOP HINGE ASSEMBLY

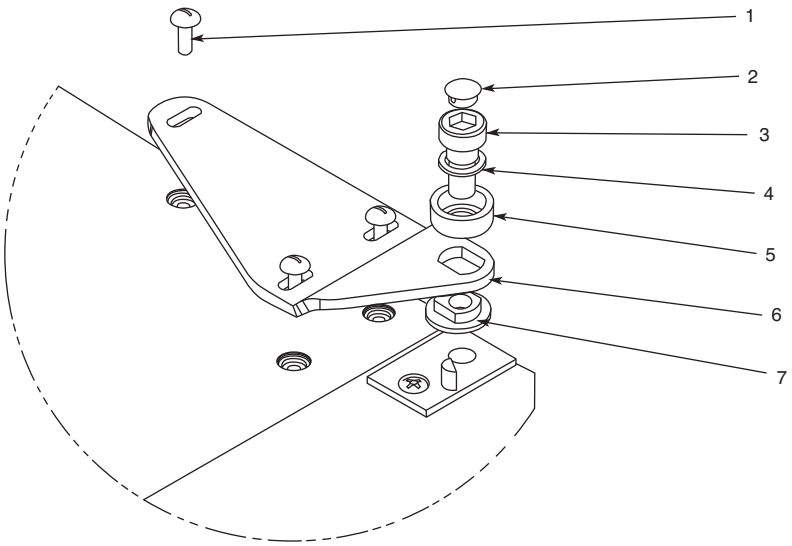

Item	Part	Description	Qty.
1	SC-28256	Screw, Hex Head	3
2	PG-25132	Plug	1
3	SC-25102	Screw	1
4	WS-25478	Washer, Serrated	1
5	WS-25127	Covering Washer	1
6	HG-25099	Upper Hinge Plate	1
7	WS-25124	Block Washer	1

ЗипРазбор
vsezip.ru
+7(812)987-08-81

BASIC CONTROL

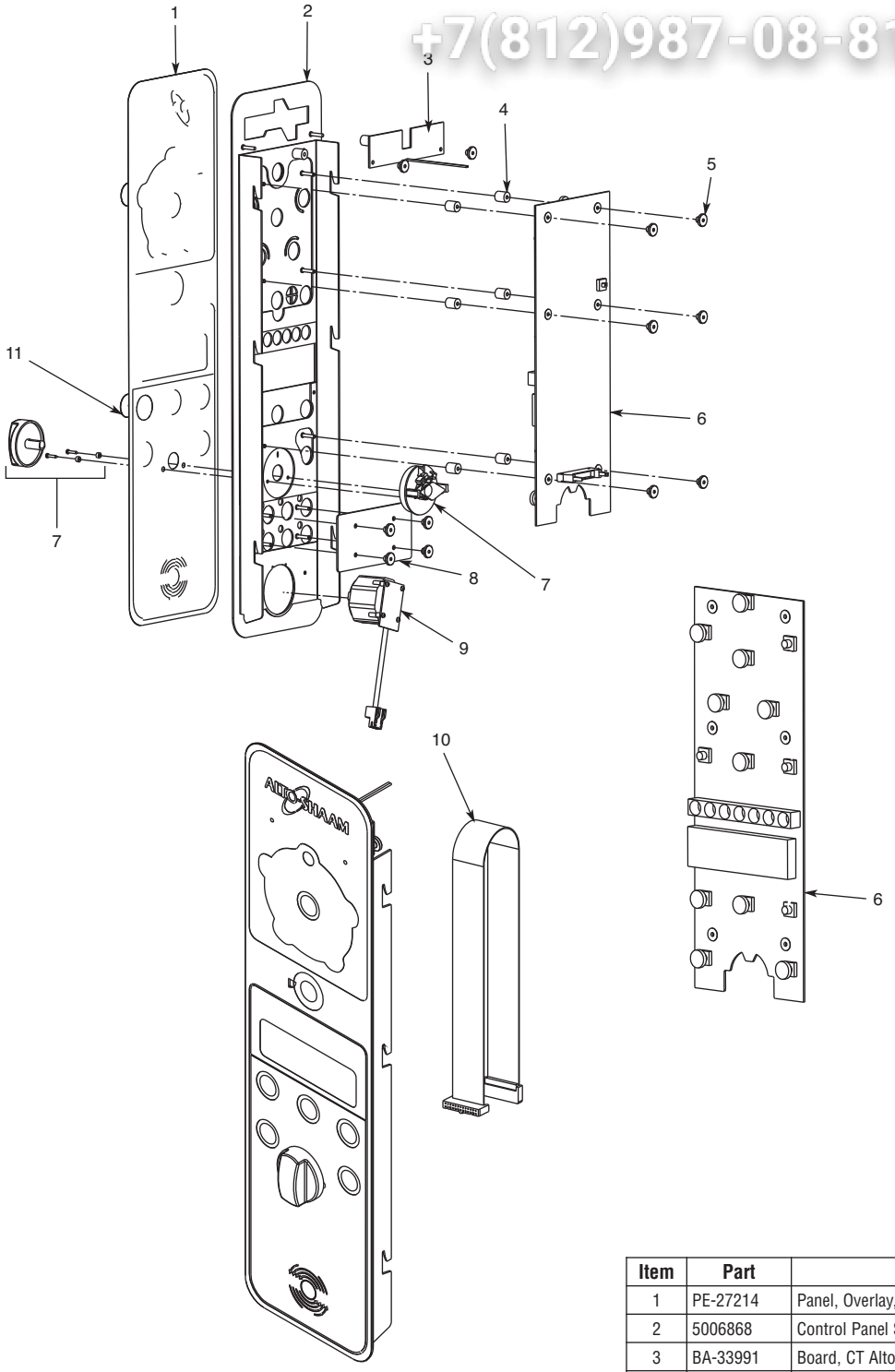

Item	Part	Description	Qty.
1	PE-27214	Panel, Overlay, Standard	1
2	5006868	Control Panel Spot	1
3	BA-33991	Board, CT Alto-Shaam Name, MLG's	1
4	BU-25094	Bushing, CT, ML, Brass, Distance	8
5	NU-25095	Knurled M3 High A2 S/S	12
6	BA-34313	Board, Operation	1
7	5007610	Control Knob Assembly	1
8	1001128	Control Cover - Optional	1
9	BA-33733	Board, LED, Closed System	1
10	CB-34033	Cable, Communication	1

ЗиПОбщепит
vsezip.ru
+7(812)987-08-81

DELUXE CONTROL

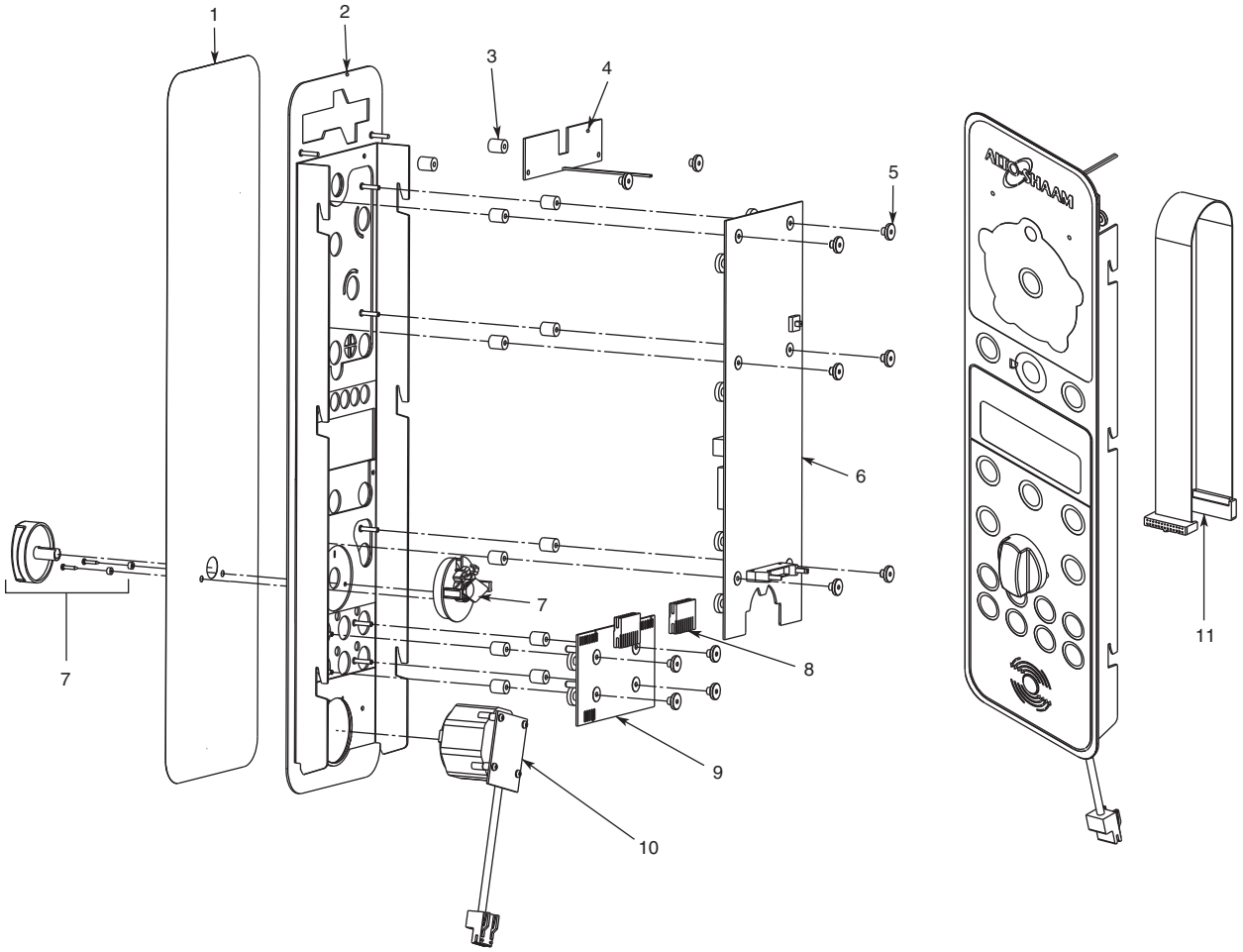

Item	Part	Description	Qty.
1	PE-27215	Panel, Overlay, Deluxe	1
2	5006868	Control Panel Spot	1
3	BU-25094	Bushing, CT, ML, Brass, Distance	12
4	BA-33991	Board, CT Alto-Shaam Name, MLG's	1
5	NU-25095	Knurled M3 High A2 S/S	12
6	BA-34313	Board, Operation	1
7	5007610	Control Knob Assembly	1
8	CR-33743	Connector	2
9	BA-33742	Board, Program	1
10	BA-33733	Board, LED, Closed System	1
11	CB-34033	Cable, Communication	1

ЗипРазбор
vsezip.ru
+7(812)987-08-81

SIMPLE CONTROL

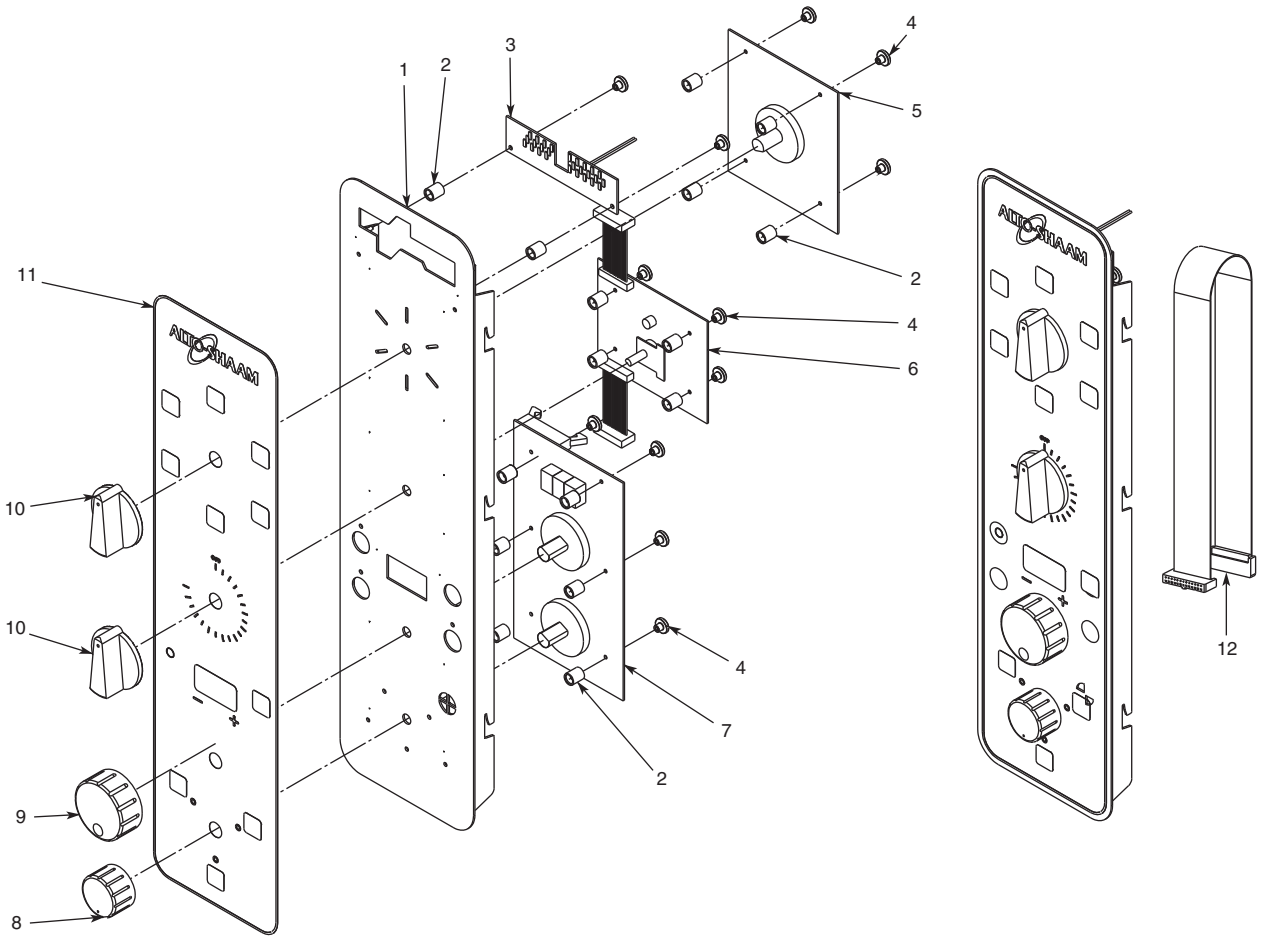

Item	Part	Description	Qty.
1	5005847	Simple Control Panel	1
2	BU-25094	Bushing, CT, ML, Brass, Distance	16
3	BA-33991	Board, CT, Alto-Shaam Name, MLG's	1
4	NU-25095	Knurled M3 High A2 S/S	16
5	BA-34030	Board, Program, "S" BM-P, MLS's	1
6	BA-34029	Board Temperature "S" BM-T, MLS's	1
7	BA-34342	Board, Speed/Timer, "S", BMS 2006	1
8	KN-34035	Knob, Fan Speed	1
9	KN-34036	Knob, Timer, Combitherm MLS	1
10	KN-34037	Knob, Program/Temperature, Combitherm MLS	2
11	PE-27213	Overlay, Simple Control	1
11	PE-27570	Overlay, Simple Control, Smoker Option	1
12	CB-34033	Cable, Communication	1

ЗиПОбщепит
vsezip.ru
+7(812)987-08-81

COMBITHERM MOTOR

Please Verify Correct Voltage Motor

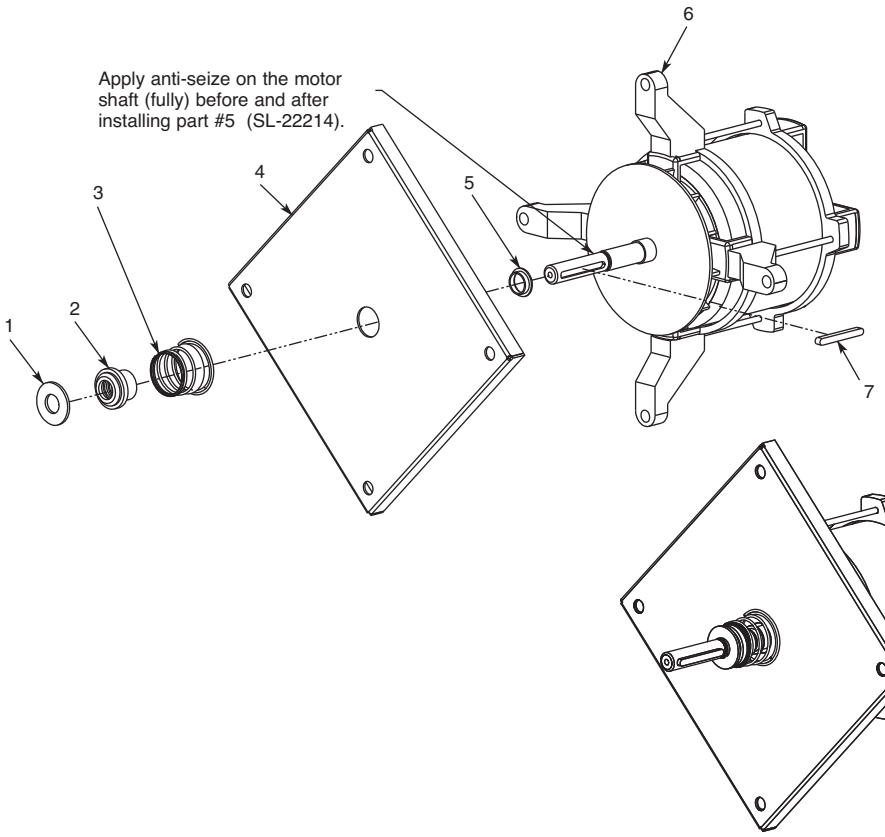

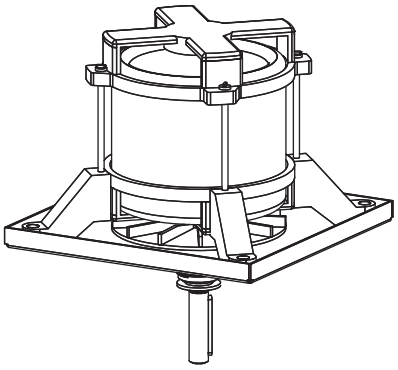

Electric Motor Assembly ES/ML Combi's

Item	Part	Description	Qty.
1	WS-22217	1.25 OD Washer	1
2	BU-22213	Bushing, CT, 30D, Motor Shaft	1
3	SD-23939	Spring	1
4	1000716	Motor Baffle	1
5	SL-22214	Motor, Defle, Phosphor Bronze	1
6	5000276	Motor, 208/230/240V	1
6	5000602	Motor, 380/415/480V	1
7	MO-22191	Keyway, Motor	1

Зип Общепит
vsezip.ru
+7(812)987-08-81

SECTION CONTENTS

Technical Data 104

Parts Information 105
- Door Assembly 105
- Recessed Door Assembly 106
- Directional Panel Assembly 107
- Steam Generator Assembly 108

Wiring and Ladder Diagrams 109
- 208-240V 3PH 50/60 Hz Wiring 109
- 208-240V 3PH 50/60 Hz Ladder 110
- 440-480V 3PH 50/60 Hz Wiring 111
- 440-480V 3PH 50/60 Hz Ladder 112
- 380-415V 3PH 50 Hz Wiring 113
- 380-415V 3PH 50 Hz Ladder 114
- 208-240V 1PH 50/60 Hz Wiring 115
- 208-240V 1PH 50/60 Hz Ladder 116

Return to Main Table of Contents 3

Зип Общепит
vsezip.ru
+7(812)987-08-81

6•10ES SPECIFICATIONS

ALTO SHAAM COMBITHERM

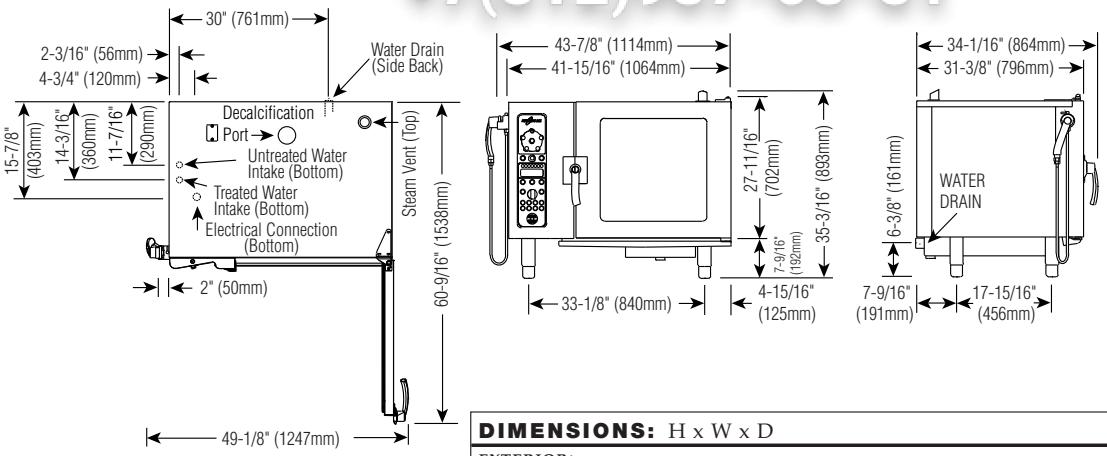

INSTALLATION REQUIREMENTS

Oven must be installed level.
Hood installation is required.
Water supply shut-off valve and back-flow preventer.

DIMENSIONS: H x W x D

EXTERIOR:
35-3/16" x 43-7/8" x 34-1/16" (893mm x 1114mm x 864mm)

EXTERIOR WITH RETRACTABLE DOOR:
35-3/16" x 47-7/8" x 34-1/16" (893mm x 1216mm x 864mm)

INTERIOR:
17-3/4" x 23-1/2" x 21-1/16" (450mm x 597mm x 535mm)

WATER REQUIREMENTS

TWO (2) COLD WATER INLETS - DRINKING QUALITY

ONE (1) TREATED WATER INLET:	3/4" NPT*	
ONE (1) UNTREATED WATER INLET:	3/4" NPT*	
LINE PRESSURE:	30 to 90 psi	2.8 to 6.2 bar

WATER DRAIN: 1-1/2" CONNECTION WITH AIR GAP

* Can manifold off of one 3/4" line.

WATER QUALITY MINIMUM STANDARDS

USING A WATER SUPPLY NOT MEETING ALTO-SHAAM'S MINIMUM WATER QUALITY STANDARDS WILL VOID THIS WARRANTY. It is the responsibility of the purchaser to ensure that incoming water supply is compliant with the specifications listed through adequate treatment measures. Installation of the CombiGuard™ Water Filtration System is recommended, but this system may not address all water quality issues present.

Contaminant	Inlet Water Requirements (untreated water)
Free Chlorine	Less than 0.1 ppm (mg/L)
Hardness	Less than 3 gpg (52 ppm)
Chloride	Less than 30 ppm (mg/L)
pH	7.0 to 8.5
Alkalinity	Less than 50 ppm (mg/L)
Silica	Less than 12 ppm (mg/L)
Total Dissolved Solids (tds)	Less than 60 ppm

CLEARANCE REQUIREMENTS

LEFT: 6" (152mm) PLUS SERVICE ACCESS: 18" (457mm) RECOMMENDED
20" (508mm) FROM HEAT PRODUCING EQUIPMENT

RIGHT: 4" (102mm) TOP: 20" (508mm) FOR AIR MOVEMENT

BACK: 4" (102mm) BOTTOM: 5-1/8" (130mm) FOR LEGS

COUNTER-TOP INSTALLATIONS MUST MAINTAIN 4" (102mm) MINIMUM CLEARANCE FROM COUNTER SURFACE.

ELECTRICAL

	VOLTAGE	PHASE	CYCLE/HZ	AWG	AMPS	kW
208-240	at 208	1*	50/60	2 Wire plus ground	40.5	8.4
	at 240			AWG 6	47.0	11.2
208-240	at 208	3	50/60	3 Wire plus ground	23.5/ph	8.4
	at 240			AWG 8	27.0/ph	11.2
380-415	at 380	3	50/60	4 Wire plus ground	13.0/ph	8.4
	at 415			AWG 12	16.0/ph	11.2
440-480	at 440	3*	50/60	3 Wire plus ground	20.0/ph	15.4
	at 480			AWG 8	22.0/ph	18.4

* ELECTRICAL SERVICE CHARGE APPLIES

WEIGHT

NET	360 lb	(163 kg)
SHIP	484 lb	(220 kg)
CRATE DIMENSIONS:	40" x 48" x 40" EST.	(1016 x 1219 x 1016mm)

CAPACITY

FULL-SIZE PANS:	20" x 12" x 2-1/2"	Six (6)
GN 1/1:	530 x 325 x 65mm	Six (6)
HALF-SIZE SHEET PANS:* ON WIRE SHELVES ONLY	18" x 13" x 1"	Six (6)

72 lb (33 kg) MAXIMUM

VOLUME MAXIMUM: 45 QUARTS (57 LITERS)

*ADDITIONAL WIRE SHELVES REQUIRED FOR MAXIMUM CAPACITY

ЗипОбщепит
vsezip.ru
+7(812)987-08-81

DOOR ASSEMBLY

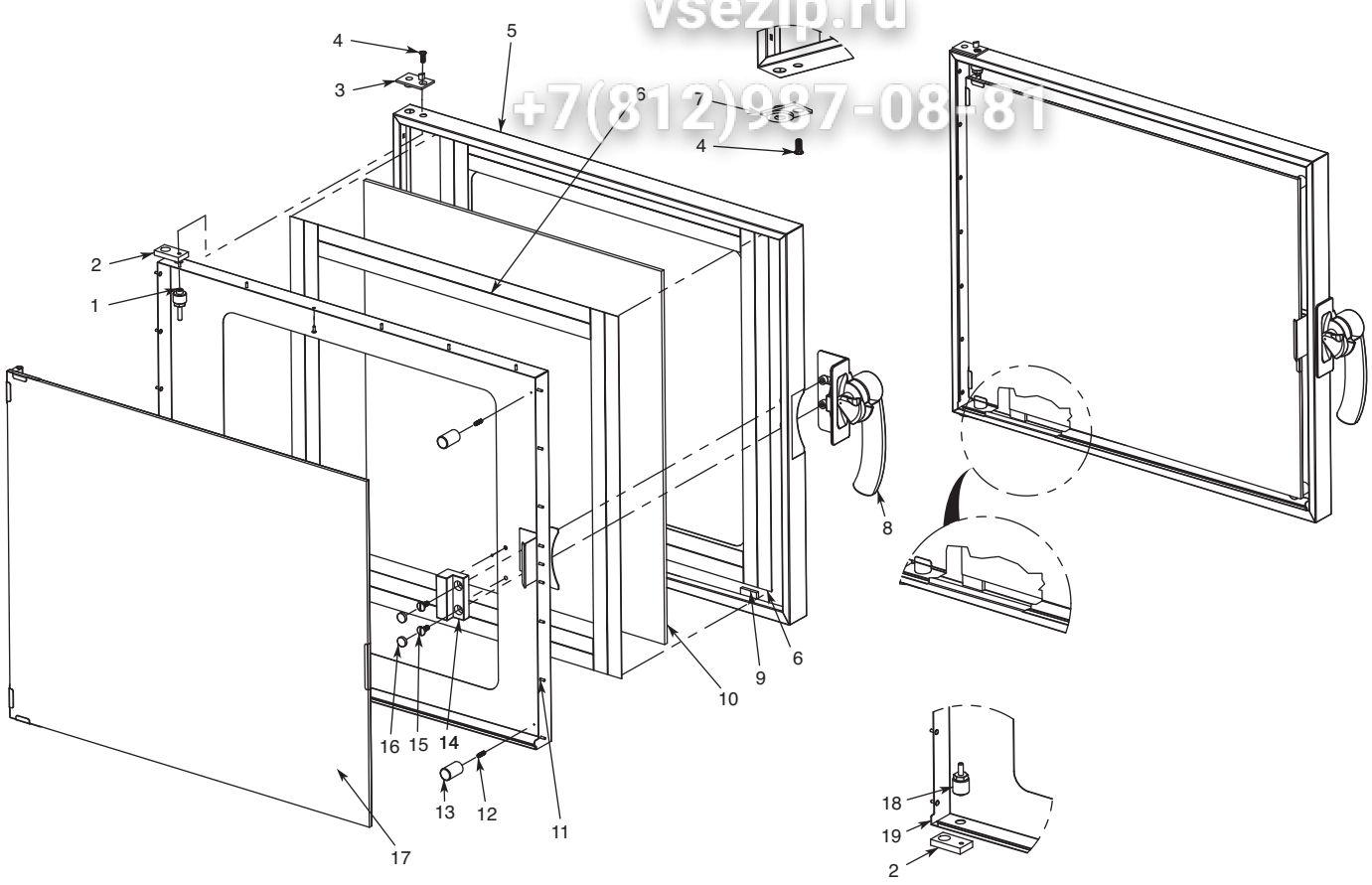

Hinge Pin Detail

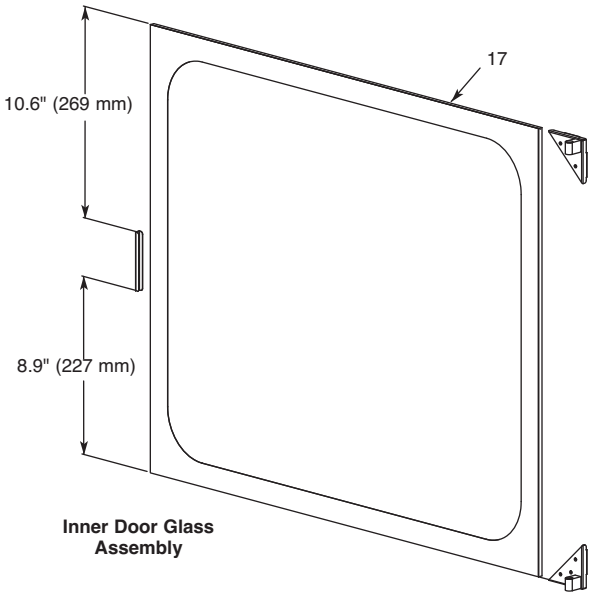

Inner Door Glass Assembly

Item	Part	Description	Qty.
1	PI-26973	Pin, Upper	1
2	HG-25078	Hinge, CT, Anchor, ML Combis	2
3	HG-25077	Hinge, CT, Top Stop, ML Combi	1
4	SC-22282	Screw, CT, 1.0X 16 mm, PH Oval, HD N/S 18-8, DIN # 966A	2
5	1005957	Outer Panel, Door	1
6	TA-25125	Tape, Double Sided	2
7	HG-25079	Hinge, CT, Upper Ratchet, Combi	1
8	HD-26966	Handle, Door, Right, Combi '06	1
9	BM-27116	Bumper	2
10	GL-27110	Glass, Outer Door, 7.14 EP	1
11	RI-27108	Rivet, Sealed	22
12	SC-25091	Screw, CT, M5X16, DIN 551, A2 S/S, SLTD Set Screw Flat PT	2
13	BM-27146	Bumper Stop/Inner Door	2
14	SP-27212	Spacer, Window Latch	1
15	SC-27125	Screw, Truss Head, S/S	2
16	PG-24789	Plug, 15 mm	2
17	5005090	Inner Door, Glass Assembly	1
18	PI-26974	Pin, Lower	1
19	5005089	Inner Door Spot RH	1
*	CL-27854	Inner Door Latch	1

*Item Not Shown

ЗипОбщепит
vsezip.ru
+7(812)987-08-81

RECESSED DOOR ASSEMBLY

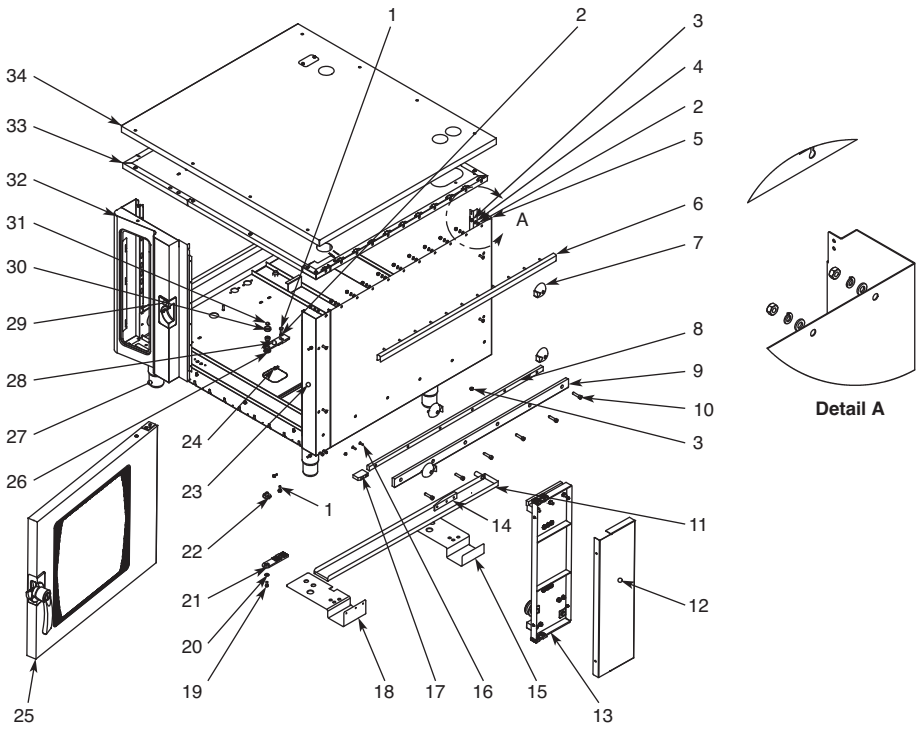

Item	Part	Description	Qty.
1	SC-22924	M6 x 20 Hex Trim HD	2
2	WS-22297	Washer, Flat, M6, DIN 125	14
3	NU-22291	M6-1.0 x Hex S/S Nut 18-8	12
4	WS-22302	Washer, Lock, M6, DIN 127B	12
5	5008015	Right Side Assembly	1
6	5007897	Channel Assembly	1
7	BK-27412	Recessed Door Block	4
8	RA-28207	Rail, Top	1
9	RA-28208	Rail, Bottom	1
10	SC-24388	Screw, SHC M8 x 35 S/S	6
11	5007893	Drip Pan Assembly	1
12	1008869	Cover, Trolley	1
13	5008001	Trolley Assembly	1
14	BK-22100	White Teflon, Cart Guide Block	1
15	1008505	Rear Bracket, Recessed	1
16	SC-22281	Screw, M5 x 16 Flat Head CSink	2
17	BK-28252	Block, Guide	1

Item	Part	Description	Qty.
18	1008506	Front Bracket Recessed	1
19	SC-22284	Screw, M6 x 16 Hex S/S HD	1
20	WS-22298	Washer, M8, 18-8	1
21	HG-28040	Hinge	1
22	HG-25101	Hinge, Lower Ratchet	1
23	5008014	Front Corner Assembly	1
24	SC-26060	M5 x 16 Hex Head	4
25	5008004	Door Assembly Recessed	1
26	WS-25124	Eccesntric Washer	1
27	LG-26867	Legs, Combi	4
28	HG-28041	Hinge	1
29	LT-26968	Latch, Door, Right	1
30	WS-25127	Covering Washer, For Hinge	1
31	PG-25132	M12, (Black or Natural)	1
32	PE-27559	Front Panel Weld Assembly	1
33	5005065	Fill In Cover Assembly	1
34	5007895	Outer Cover Assembly	1

ЗипОбщепит
vsezip.ru
+7(812)987-08-81

DIRECTIONAL PANEL ASSEMBLY

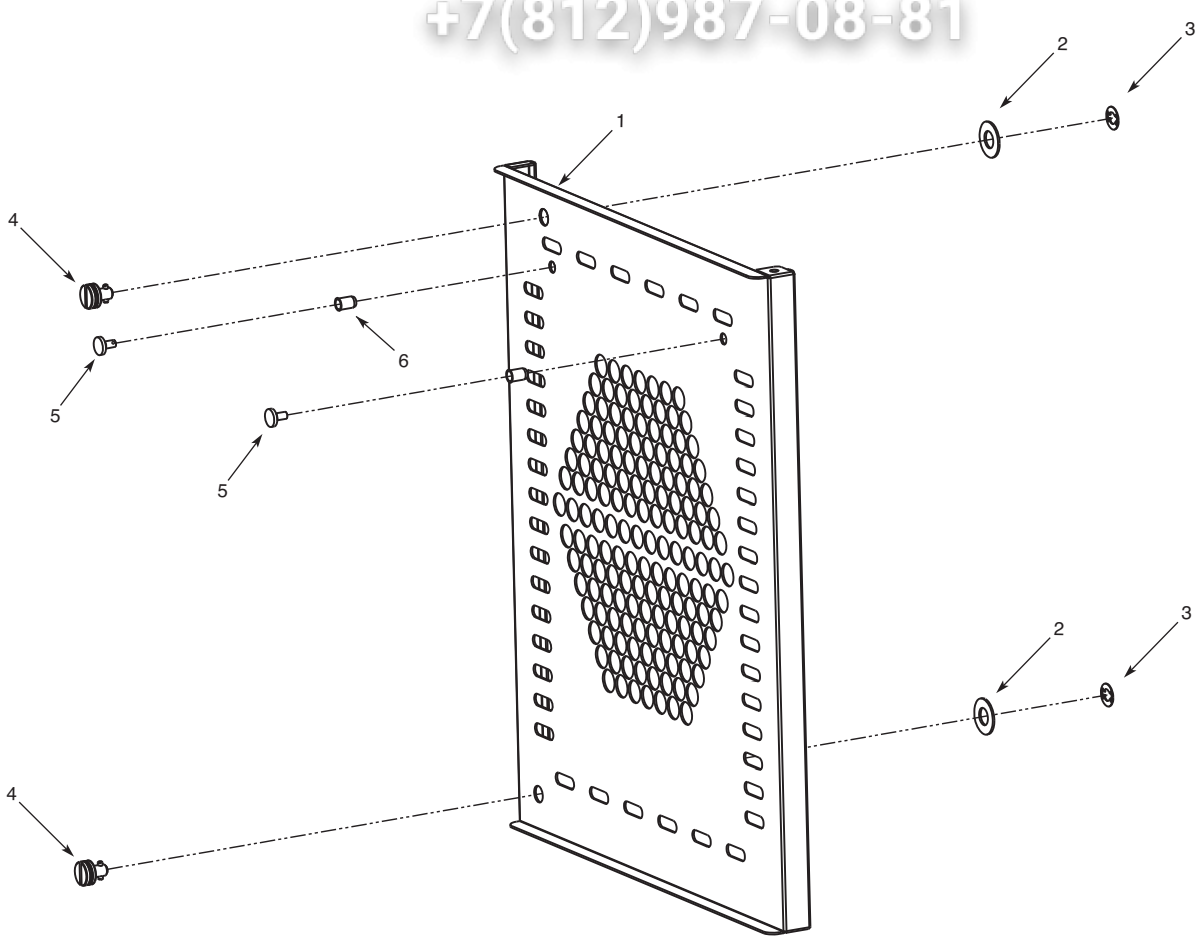

Item	Part	Description	Qty.
1	1006677	Directional Panel	1
2	1006601	16 GA Directional Panel Spacer	2
3	WS-24090	Holding (Lock Clip)	2
4	CL-24089	Clip, CT, ML, Lock, W/3 Washers	2
5	SC-22753	Screw, SS Round, Hanging Rack	2
6	NU-22770	Nut, Threaded Insert, M6	2
*	5005380	Fan Panel Assembly	1

*Item Not Shown

ЗипОбщепит
vsezip.ru
+7(812)987-08-81

STEAM GENERATOR ASSEMBLY

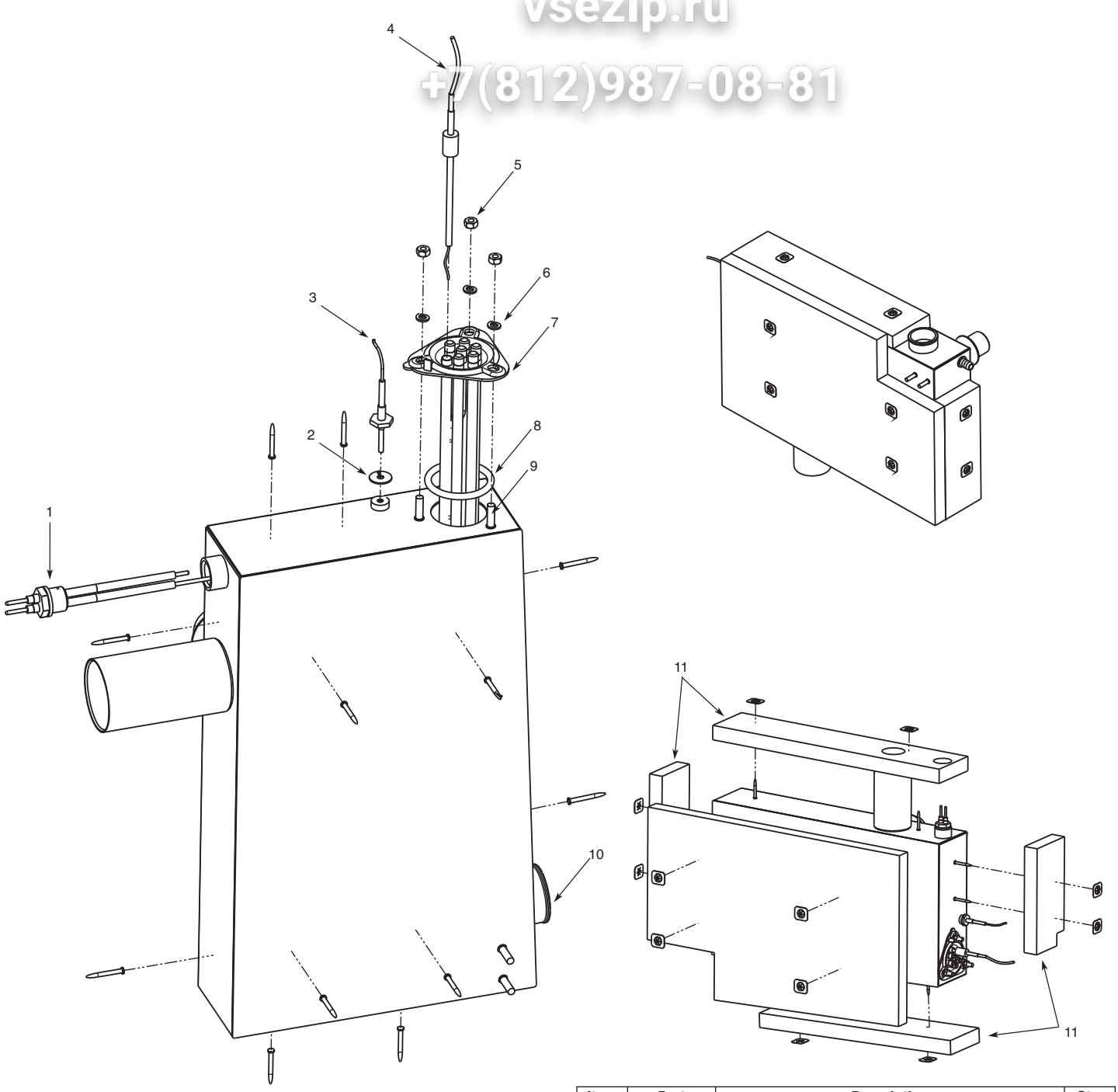

Item	Part	Description	Qty.
1	PR-3707	CT, Water Lev. Lg 3/4" NPT Fitting, 316 S/S Electr.	1
2	SA-25061	CT, T-Couple Probe	1
3	PR-33724	CT, Thermocouple, 1650 mm Wire Length	1
4	PR-33759	CT, Temperature Sensor	1
5	NU-22291	M6-1.0 x Hex S/S Nut 18-8	6
6	WS-22302	Washer, M6 DIN # 127B	6
7	EL-33411	CT, Heater, Combi Immersion, 9kw, Flanged	1
8	SA-23932	O-Ring, 14 mm x 2.5 mm Viton	2
9	ST-22278	Stud M6 x 20 mm	8
10	5005069	Generator Tank	1
11	IN-22265	Insulation, Steam Gen	1

Зип Общепит
vsezip.ru
+7(812)987-08-31

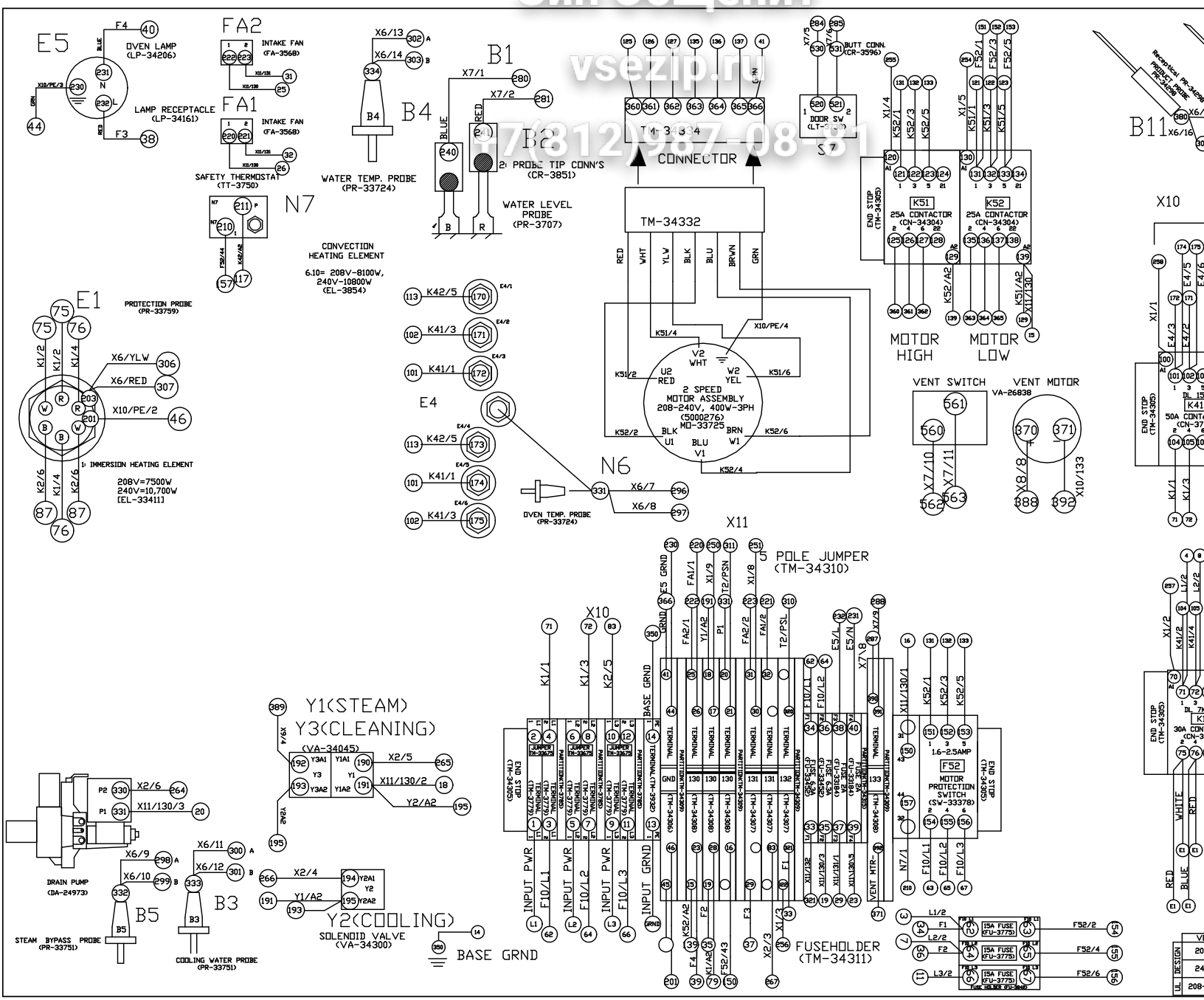

Зип Общепит
vsezip.ru
+7(812)987-08-81

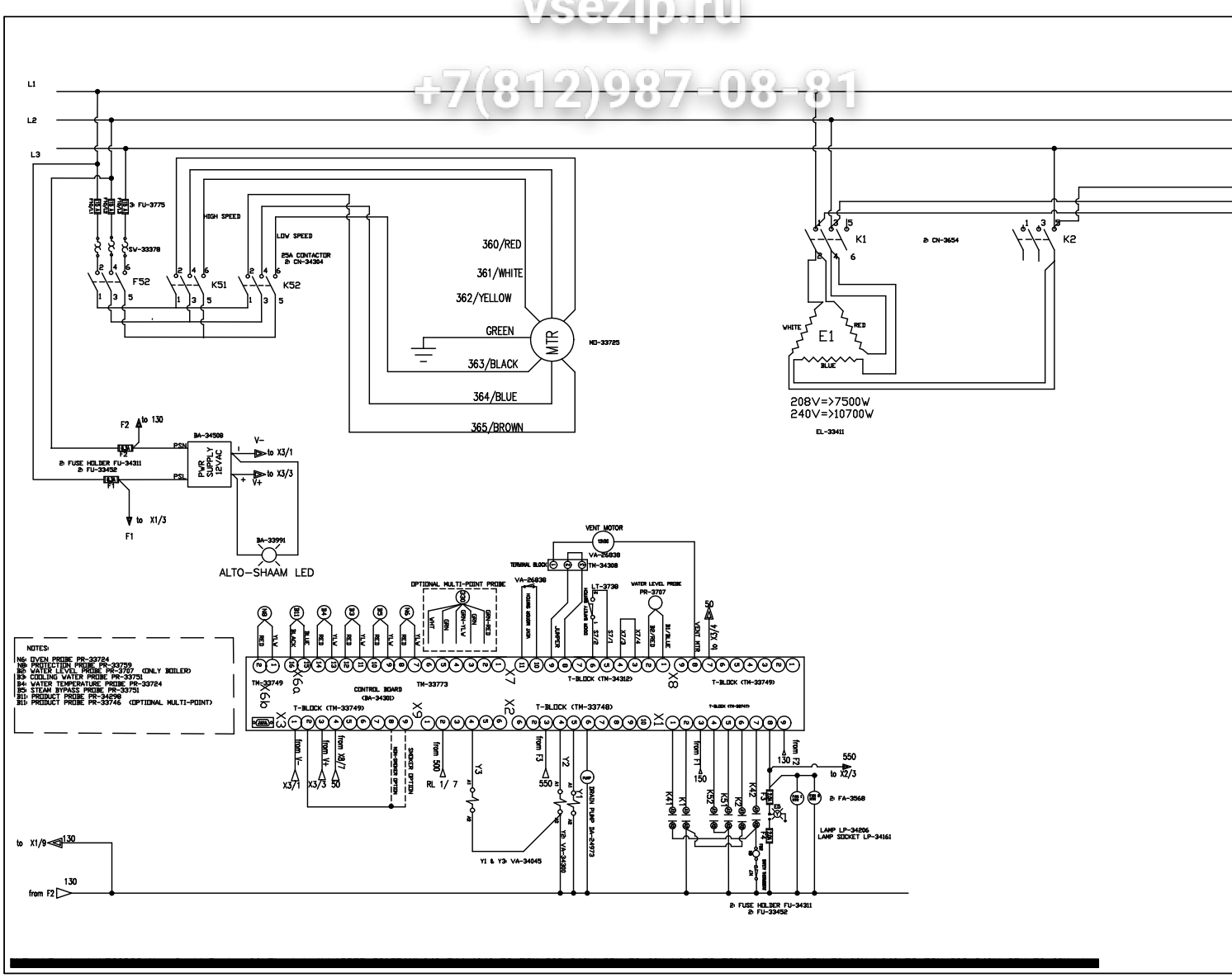

Зип Общепит
vsezip.ru
+7(812)987-08-81

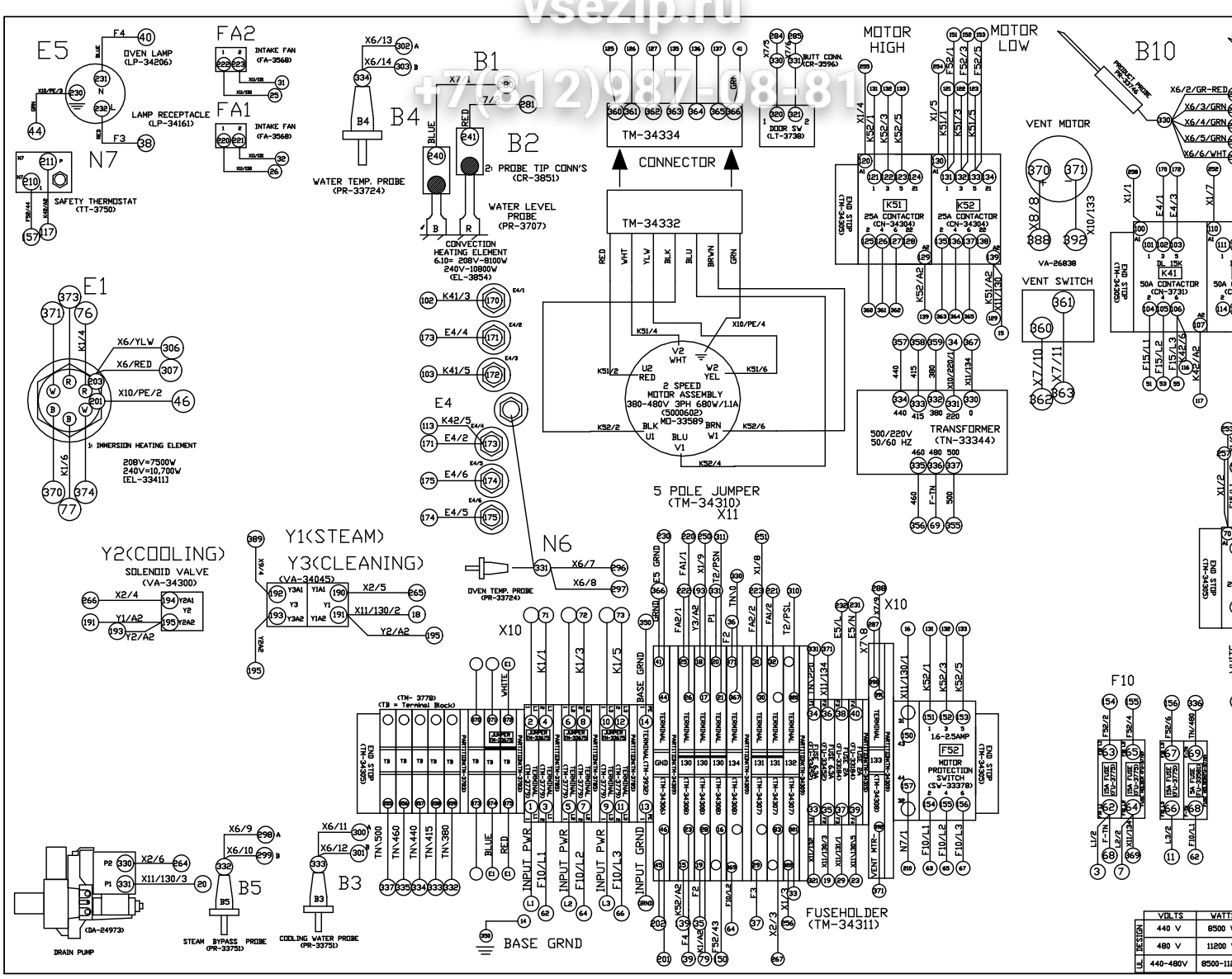

Зип Общепит
vsezip.ru
+7(812)987-08-81

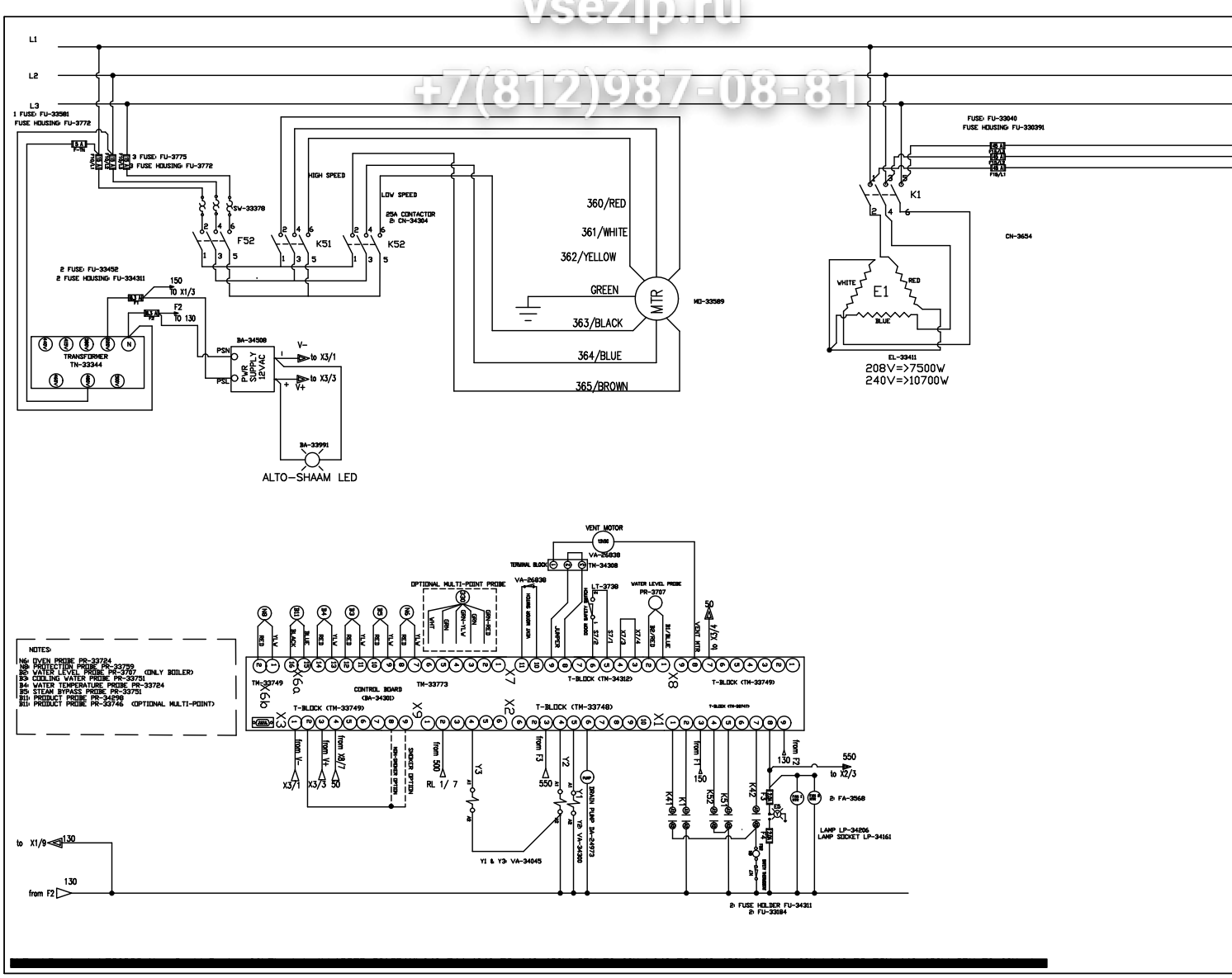

Зип Общепит
vsezip.ru
+7(812)987-08-81

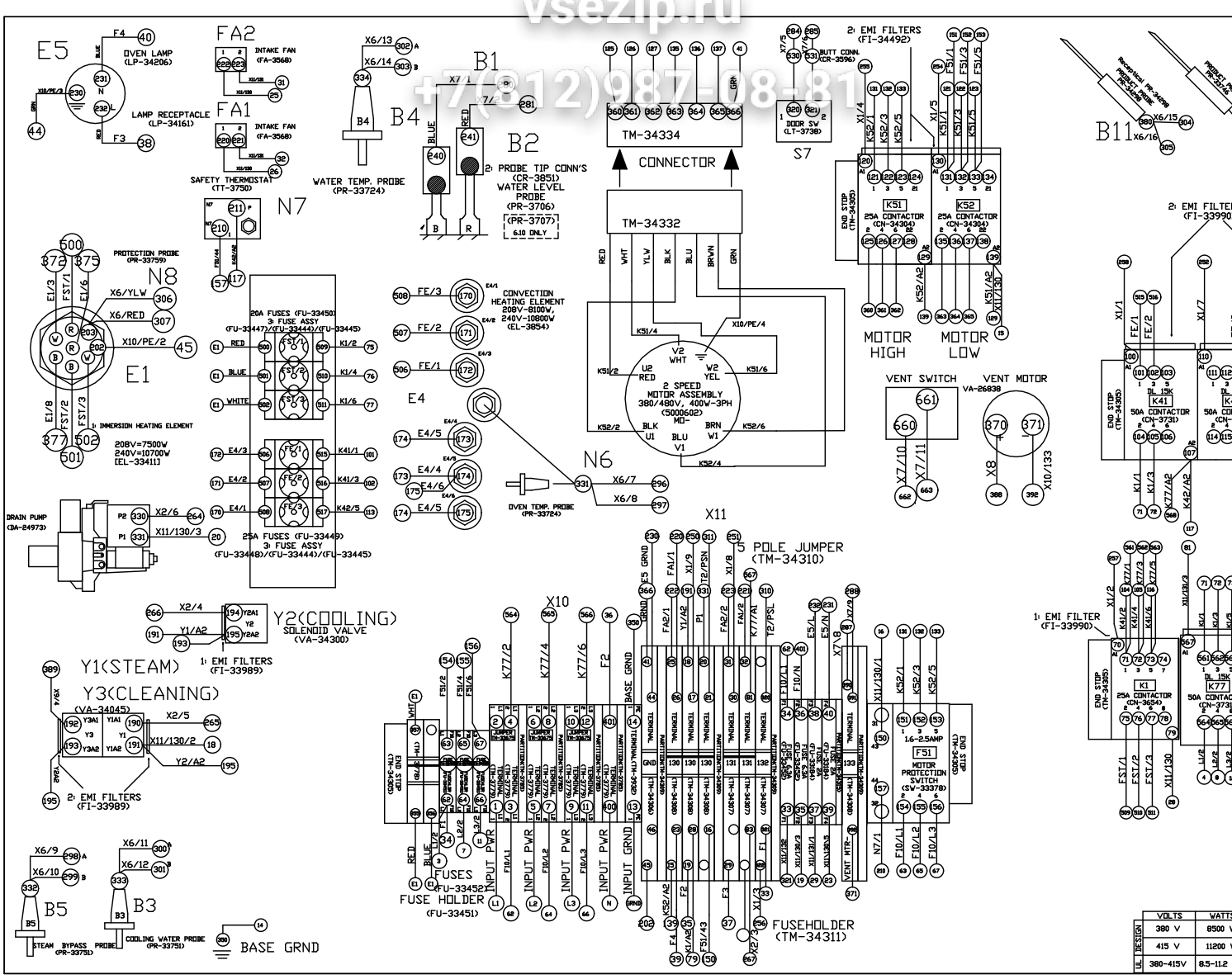

	VOLTS	WATTS
DESIGN	380 V	8500 W
	415 V	11200 W
UL	380-415V	8.5-11.2

Зип Общепит
vsezip.ru
+7(812)987-08-81

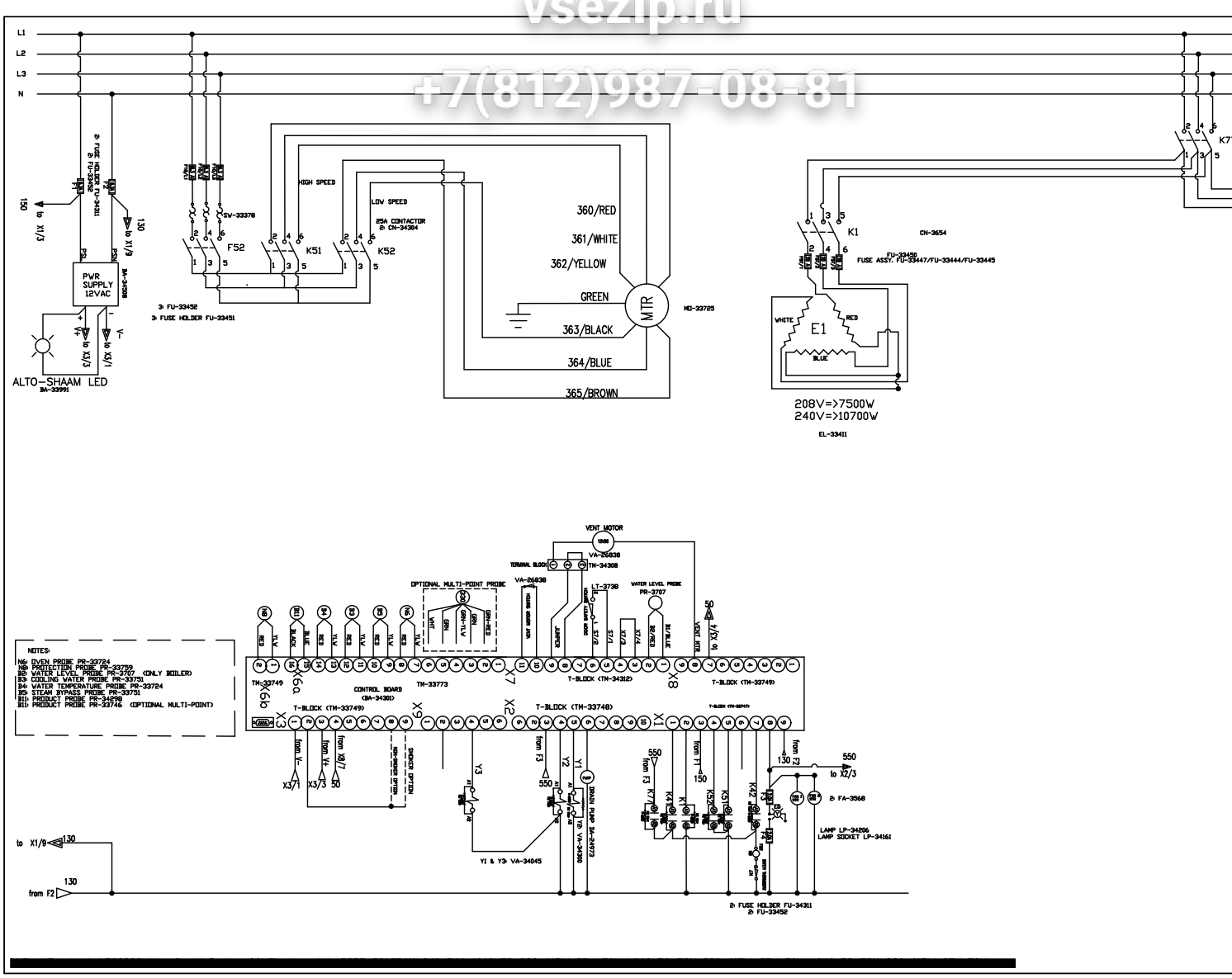

Зип Общепит
vsezip.ru
+7(812)987-08-81

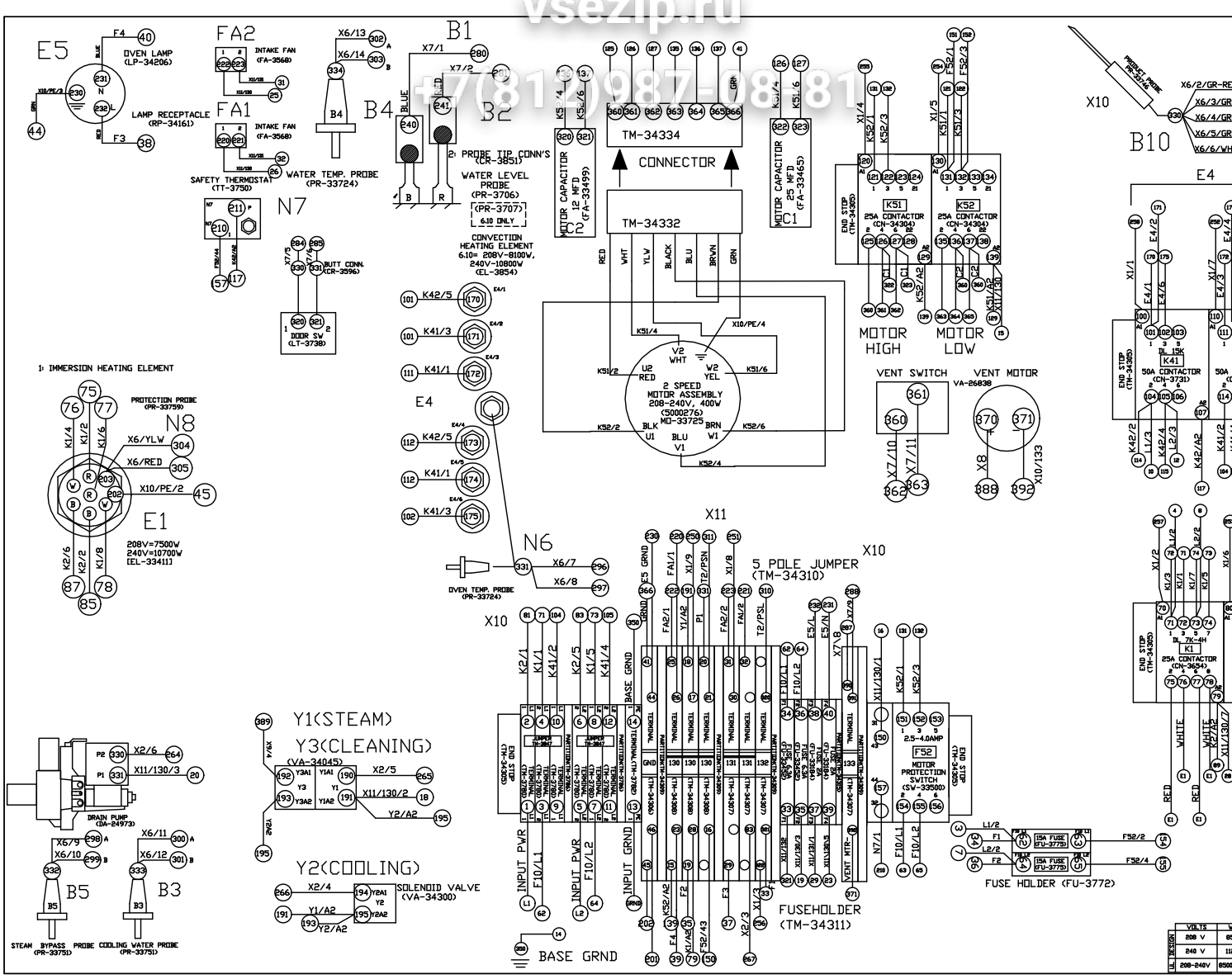

Зип Общепит
vsezip.ru
+7(812)987-08-81

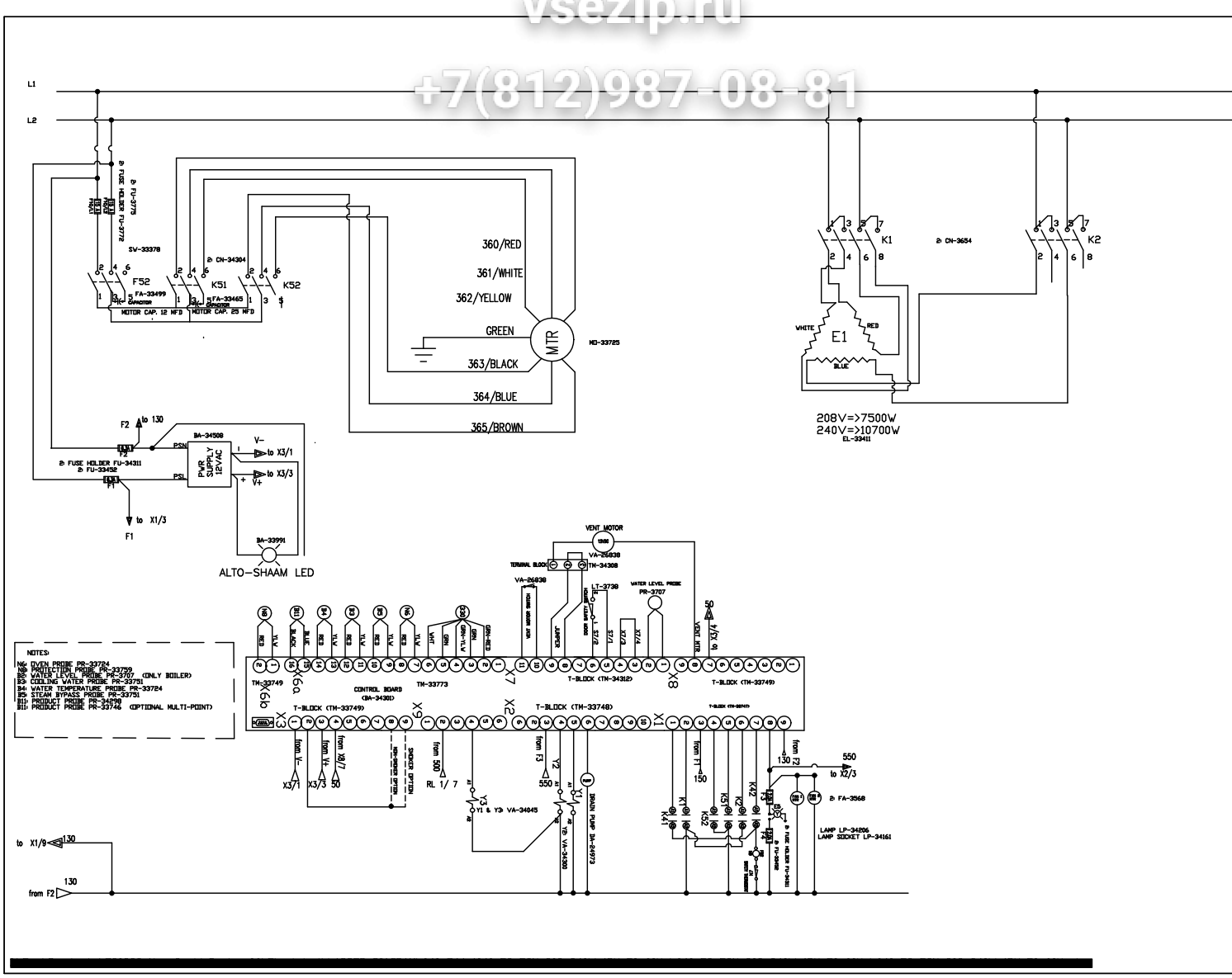

Зип Общепит
vsezip.ru
+7(812)987-08-81

SECTION CONTENTS

Technical Data 118

Parts Information 119
- Door Assembly 119
- Recessed Door Assembly 120
- Directional Panel Assembly 121
- Pressure Box Assembly 122

Wiring and Ladder Diagrams 123
- 208-240V 3PH 50/60 Hz Wiring 123
- 208-240V 3PH 50/60 Hz Ladder 124
- 440-480V 3PH 50/60 Hz Wiring 125
- 440-480V 3PH 50/60 Hz Ladder 126
- 380-415V 3PH 50 Hz Wiring 127
- 380-415V 3PH 50 Hz Ladder 128
- 208-240V 1PH 50/60 Hz Wiring 129
- 208-240V 1PH 50/60 Hz Ladder 130

Return to Main Table of Contents 3

Зип Общепит
vsezip.ru
+7(812)987-08-81

ALTO SHAAM COMBITHERM

6•10Esi SPECIFICATIONS

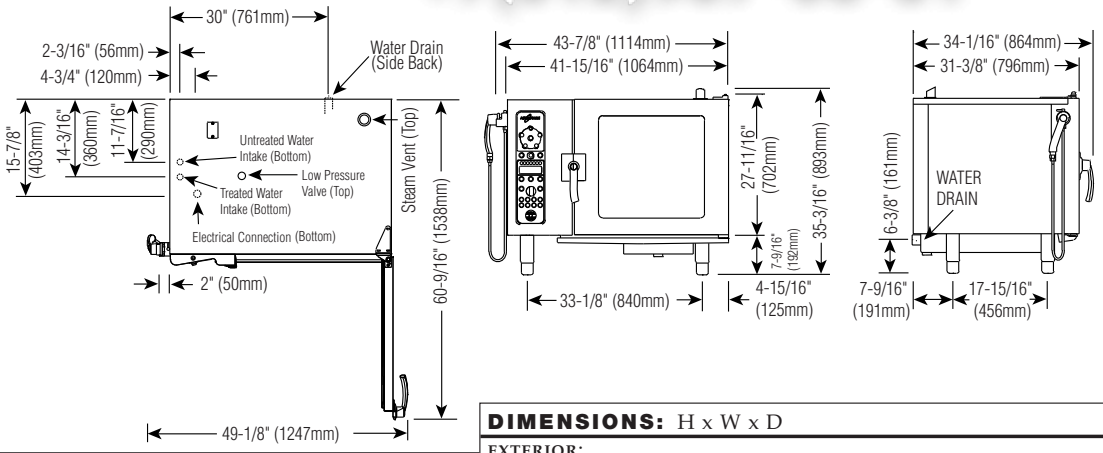

DIMENSIONS: H x W x D

EXTERIOR:
35-3/16" x 43-7/8" x 34-1/16" (893mm x 1114mm x 864mm)

EXTERIOR WITH RETRACTABLE DOOR:
35-3/16" x 47-7/8" x 34-1/16" (893mm x 1216mm x 864mm)

INTERIOR:
17-3/4" x 23-1/2" x 21-1/16" (450mm x 597mm x 535mm)

INSTALLATION REQUIREMENTS

Oven must be installed level.
Hood installation is required.
Water supply shut-off valve and back-flow preventer.

WATER REQUIREMENTS

TWO (2) COLD WATER INLETS - DRINKING QUALITY

ONE (1) TREATED WATER INLET: 3/4" NPT*
ONE (1) UNTREATED WATER INLET: 3/4" NPT*
LINE PRESSURE: 30 to 90 psi 2.8 to 6.2 bar

WATER DRAIN: 1-1/2" CONNECTION WITH AIR GAP

* Can manifold off of one 3/4" line.

CLEARANCE REQUIREMENTS

LEFT: 6" (152mm) PLUS SERVICE ACCESS: 18" (457mm) RECOMMENDED
20" (508mm) FROM HEAT PRODUCING EQUIPMENT
RIGHT: 4" (102mm) TOP: 20" (508mm) FOR AIR MOVEMENT
BACK: 4" (102mm) BOTTOM: 5-1/8" (130mm) FOR LEGS

COUNTER-TOP INSTALLATIONS MUST MAINTAIN 4" (102mm) MINIMUM CLEARANCE FROM COUNTER SURFACE.

WATER QUALITY MINIMUM STANDARDS

USING A WATER SUPPLY NOT MEETING ALTO-SHAAM'S MINIMUM WATER QUALITY STANDARDS WILL VOID THIS WARRANTY. It is the responsibility of the purchaser to ensure that incoming water supply is compliant with the specifications listed through adequate treatment measures. Installation of the CombiGuard™ Water Filtration System is recommended, but this system may not address all water quality issues present.

Contaminant	Inlet Water Requirements (untreated water)
Free Chlorine	Less than 0.1 ppm (mg/L)
Hardness	Less than 3 gpg (52 ppm)
Chloride	Less than 30 ppm (mg/L)
pH	7.0 to 8.5
Alkalinity	Less than 50 ppm (mg/L)
Silica	Less than 12 ppm (mg/L)
Total Dissolved Solids (tds)	Less than 60 ppm

ELECTRICAL

	VOLTAGE	PHASE	CYCLE/HZ	AWG	6•10Esi AMPS	6•10Esi kW	6•10Esi/sk AMPS	6•10Esi/sk kW
208-240	at 208	1*	50/60	2 Wire plus ground	41.0	8.5	43.3	9.0
	at 240			AWG 6	47.0	11.2	48.0	11.7
208-240	at 208	3	50/60	3 Wire plus ground	23.3/ph	8.4	25.0/ph	9.0
	at 240			AWG 8	27.0/ph	11.2	28.2/ph	11.7
380-415	at 380	3	50/60	4 Wire plus ground	13.0/ph	8.5	14.0/ph	9.0
	at 415			AWG 12	15.6/ph	11.2	16.3/ph	11.7
440-480	at 440	3*	50/60	3 Wire plus ground	20.0/ph	15.4	21.0/ph	15.9
	at 480			AWG 8	22.0/ph	18.4	23.0/ph	18.9

* ELECTRICAL SERVICE CHARGE APPLIES

WEIGHT

NET	343 lb	(156 kg)
SHIP	467 lb	(212 kg)
CRATE	40" x 48" x 40" EST.	
DIMENSIONS:	(1016 x 1219 x 1016mm)	

CAPACITY

FULL-SIZE PANS: 20" x 12" x 2-1/2"	Six (6)	Four (4)
GN 1/1: 530 x 325 x 65mm	Six (6)	Four (4)
HALF-SIZE SHEET PANS:* 18" x 13" x 1" ON WIRE SHELVES ONLY	Six (6)	Five (5)

72 lb (33 kg) MAXIMUM

VOLUME MAXIMUM: 45 QUARTS (57 LITERS)

*ADDITIONAL WIRE SHELVES REQUIRED FOR MAXIMUM CAPACITY

ELECTRIC COMBITHERM — INSTALLATION MANUAL #7001

ЗипОбщепит
vsezip.ru
+7(812)987-08-81

DOOR ASSEMBLY

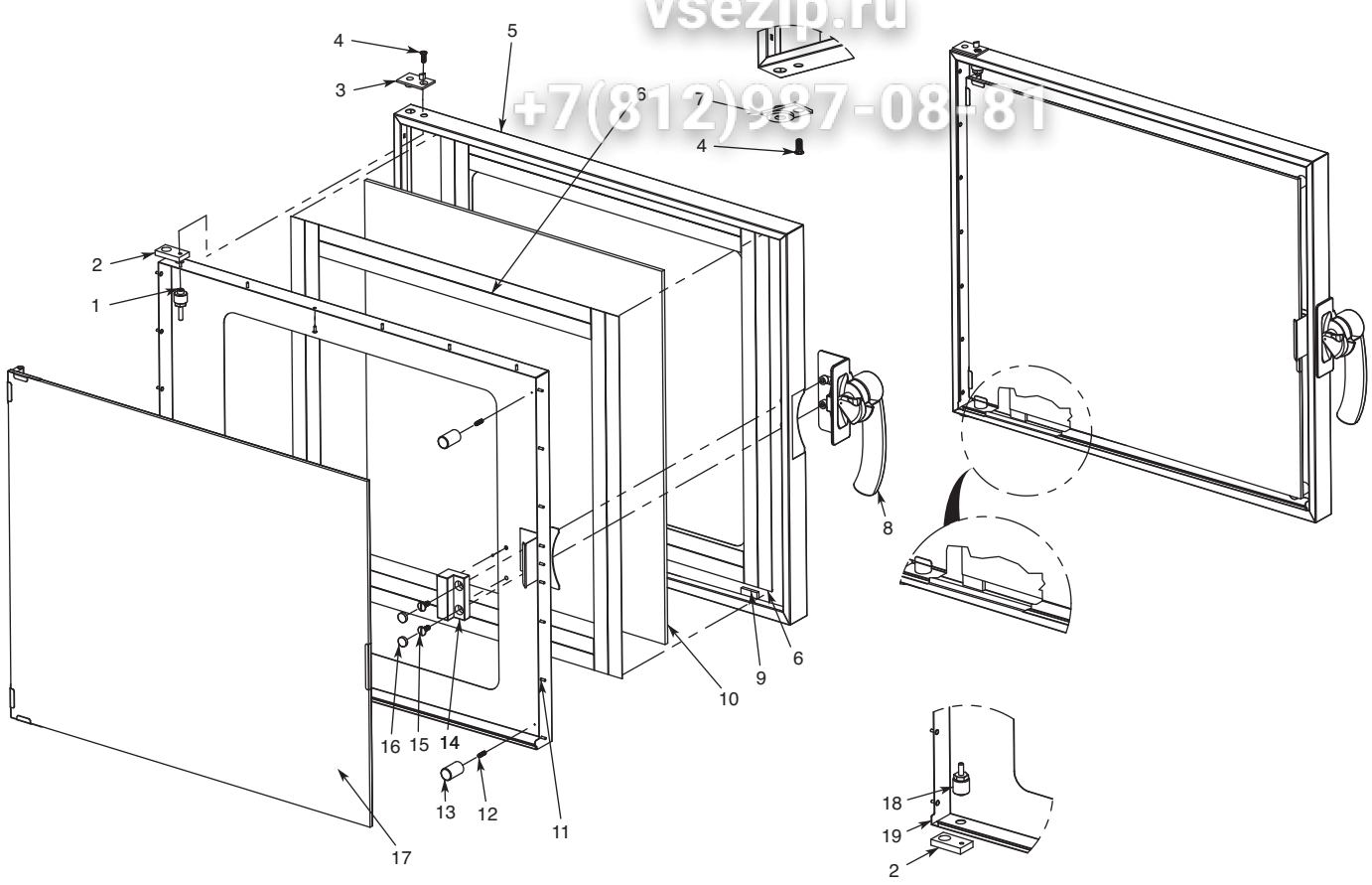

Hinge Pin Detail

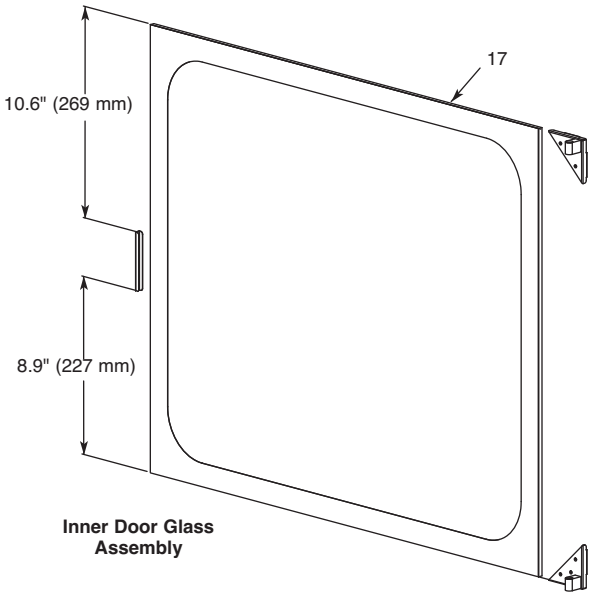

Inner Door Glass Assembly

Item	Part	Description	Qty.
1	PI-26973	Pin, Upper	1
2	HG-25078	Hinge, CT, Anchor, ML Combis	2
3	HG-25077	Hinge, CT, Top Stop, ML Combi	1
4	SC-22282	Screw, CT, 1.0X 16 mm, PH Oval, HD N/S 18-8, DIN # 966A	2
5	1005957	Outer Panel, Door	1
6	TA-25125	Tape, Double Sided	2
7	HG-25079	Hinge, CT, Upper Ratchet, Combi	1
8	HD-26966	Handle, Door, Right, Combi '06	1
9	BM-27116	Bumper	2
10	GL-27110	Glass, Outer Door, 7.14 EP	1
11	RI-27108	Rivet, Sealed	22
12	SC-25091	Screw, CT, M5X16, DIN 551, A2 S/S, SLTD Set Screw Flat PT	2
13	BM-27146	Bumper Stop/Inner Door	2
14	SP-27212	Spacer, Window Latch	1
15	SC-27125	Screw, Truss Head, S/S	2
16	PG-24789	Plug, 15 mm	2
17	5005090	Inner Door, Glass Assembly	1
18	PI-26974	Pin, Lower	1
19	5005089	Inner Door Spot RH	1
*	CL-27854	Inner Door Latch	1

*Item Not Shown

ЗипОбщепит
vsezip.ru
+7(812)987-08-81

RECESSED DOOR ASSEMBLY

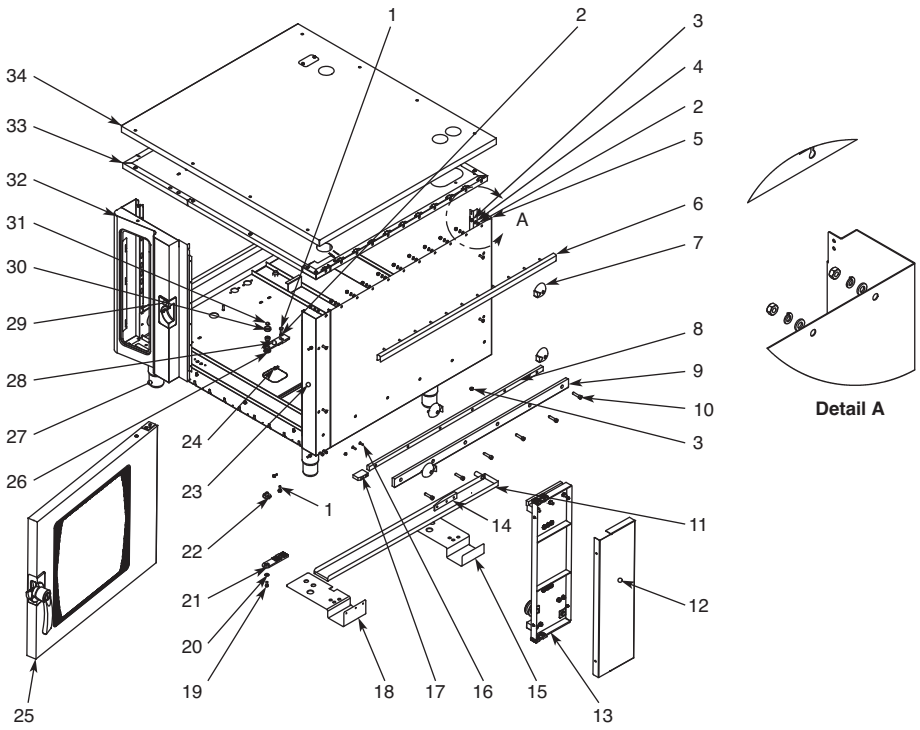

Item	Part	Description	Qty.
1	SC-22924	M6 x 20 Hex Trim HD	2
2	WS-22297	Washer, Flat, M6, DIN 125	14
3	NU-22291	M6-1.0 x Hex S/S Nut 18-8	12
4	WS-22302	Washer, Lock, M6, DIN 127B	12
5	5008015	Right Side Assembly	1
6	5007897	Channel Assembly	1
7	BK-27412	Recessed Door Block	4
8	RA-28207	Rail, Top	1
9	RA-28208	Rail, Bottom	1
10	SC-24388	Screw, SHC M8 x 35 S/S	6
11	5007893	Drip Pan Assembly	1
12	1008869	Cover, Trolley	1
13	5008001	Trolley Assembly	1
14	BK-22100	White Teflon, Cart Guide Block	1
15	1008505	Rear Bracket, Recessed	1
16	SC-22281	Screw, M5 x 16 Flat Head CSink	2
17	BK-28252	Block, Guide	1

Item	Part	Description	Qty.
18	1008506	Front Bracket Recessed	1
19	SC-22284	Screw, M6 x 16 Hex S/S HD	1
20	WS-22298	Washer, M8, 18-8	1
21	HG-28040	Hinge	1
22	HG-25101	Hinge, Lower Ratchet	1
23	5008014	Front Corner Assembly	1
24	SC-26060	M5 x 16 Hex Head	4
25	5008004	Door Assembly Recessed	1
26	WS-25124	Eccesntric Washer	1
27	LG-26867	Legs, Combi	4
28	HG-28041	Hinge	1
29	LT-26968	Latch, Door, Right	1
30	WS-25127	Covering Washer, For Hinge	1
31	PG-25132	M12, (Black or Natural)	1
32	PE-27559	Front Panel Weld Assembly	1
33	5005065	Fill In Cover Assembly	1
34	5007895	Outer Cover Assembly	1

ЗипОбщепит
vsezip.ru
+7(812)987-08-81

DIRECTIONAL PANEL ASSEMBLY

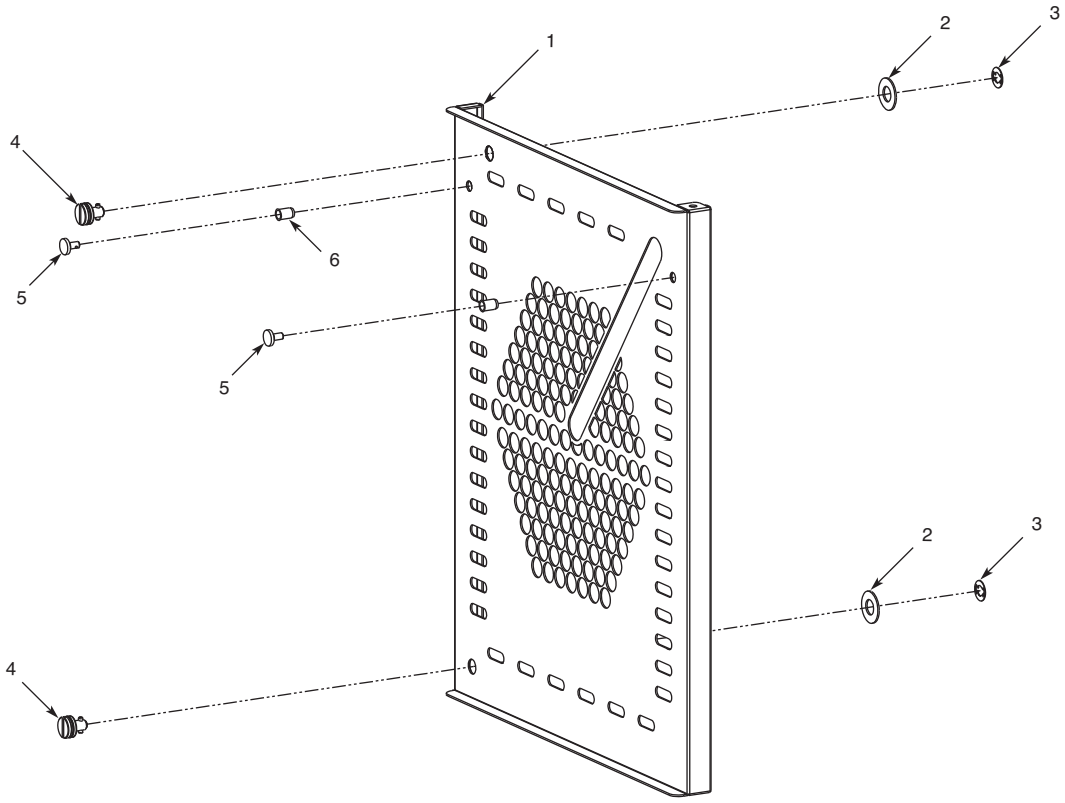

Item	Part	Description	Qty.
1	1006762	Directional Panel	1
2	1006601	Directional Panel Spacer	2
3	WS-24090	Holding (Lock Clip)	2
4	CL-24089	Clip, CT, ML, Lock, W/3 Washers	2
5	SC-22753	Screw, SS Round, Hanging Rack	2
6	NU-22770	Nut, Threaded Insert, M6	2

ЗиП Общепит
vsezip.ru
+7(812)987-08-81

PRESSURE BOX ASSEMBLY

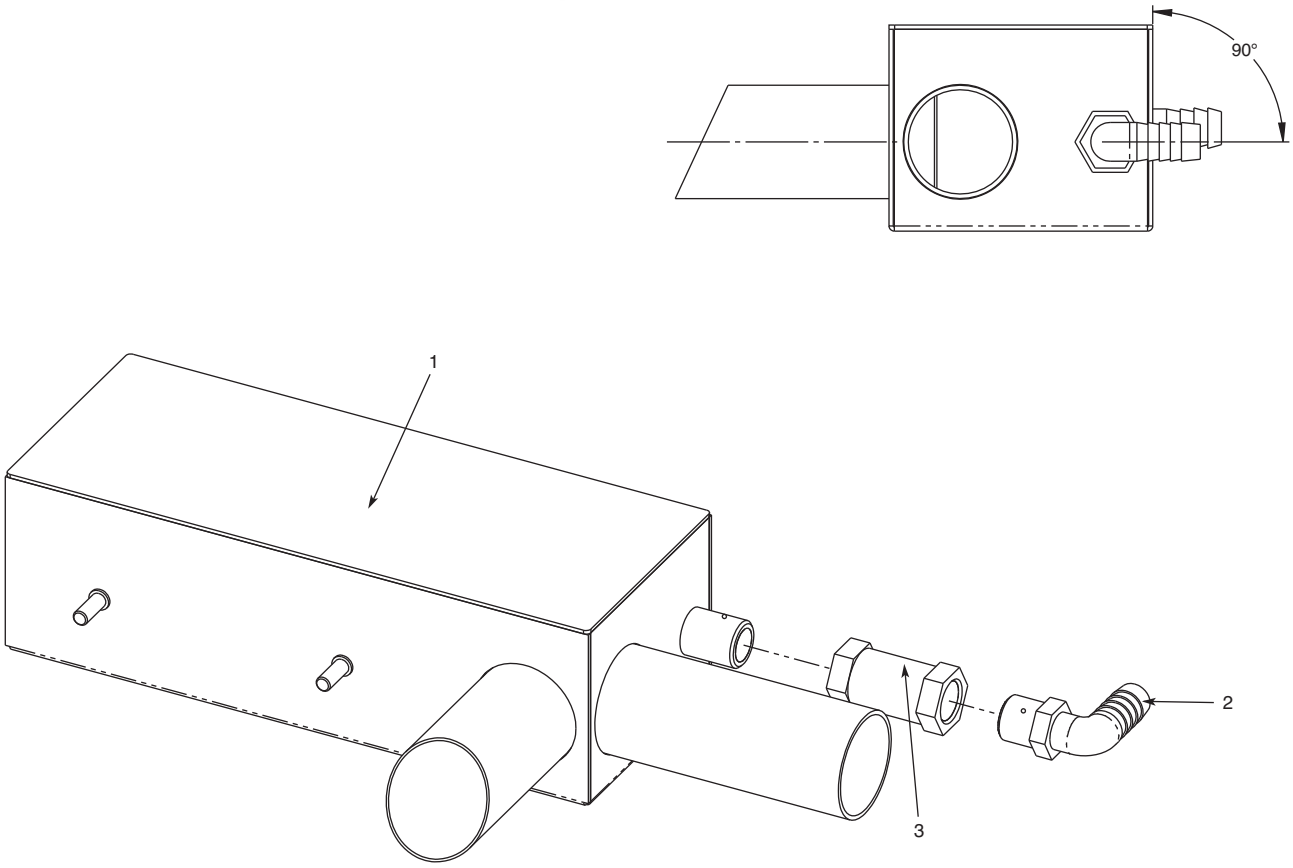

Item	Part	Description	Qty.
1	5005009	Pressure Box	1
2	EB-25551	Elbow, Nylon, 1/2" x 3/8"	1
3	VA-25549	Valve, 3/8", Flow Control, 0.12 GPM	1

Зип Общепит
vsezip.ru
+7(812)987-08-81

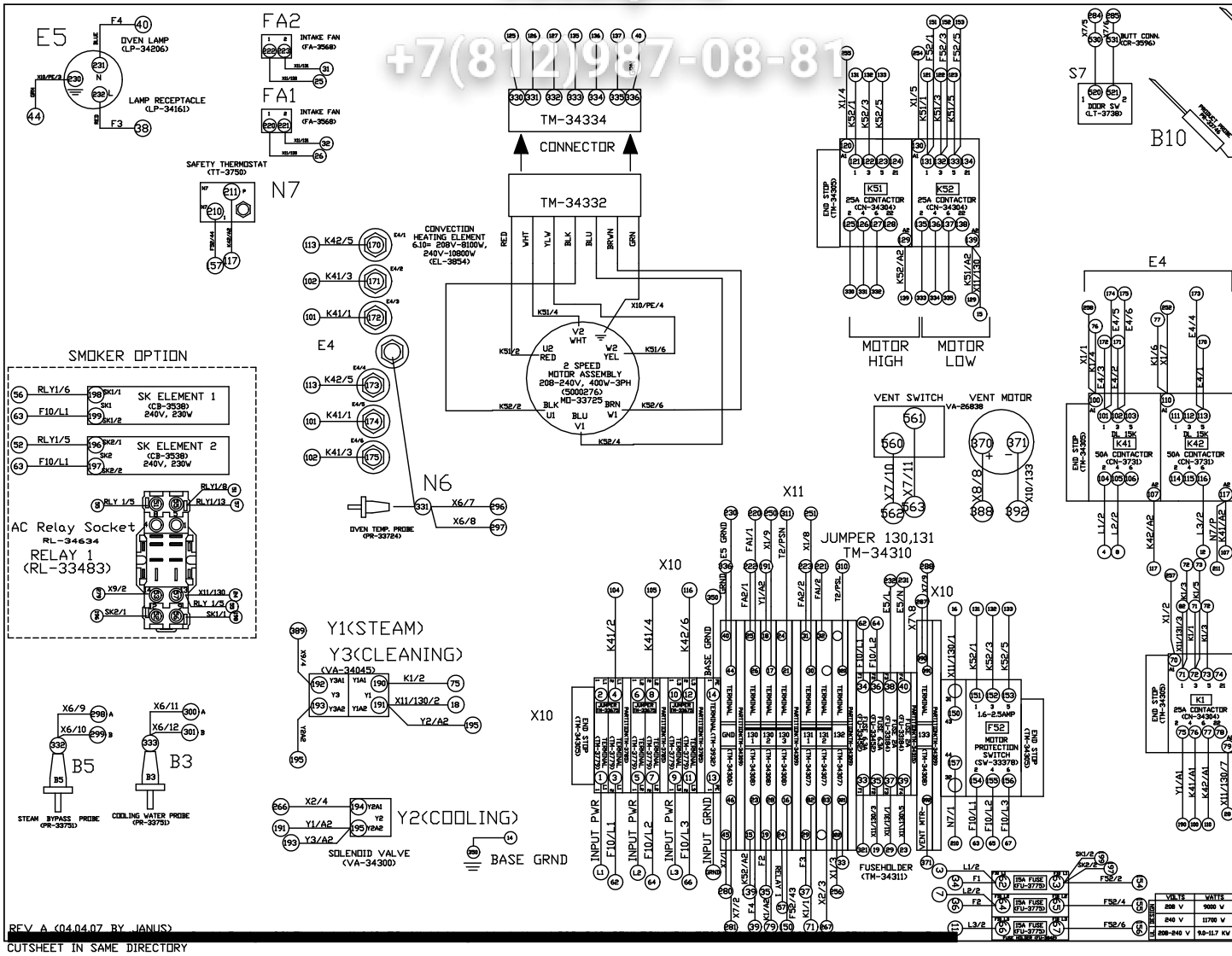

REV A (04.04.07 BY JANUS)
CUTSHEET IN SAME DIRECTORY

Зип Общепит
vsezip.ru
+7(812)987-08-81

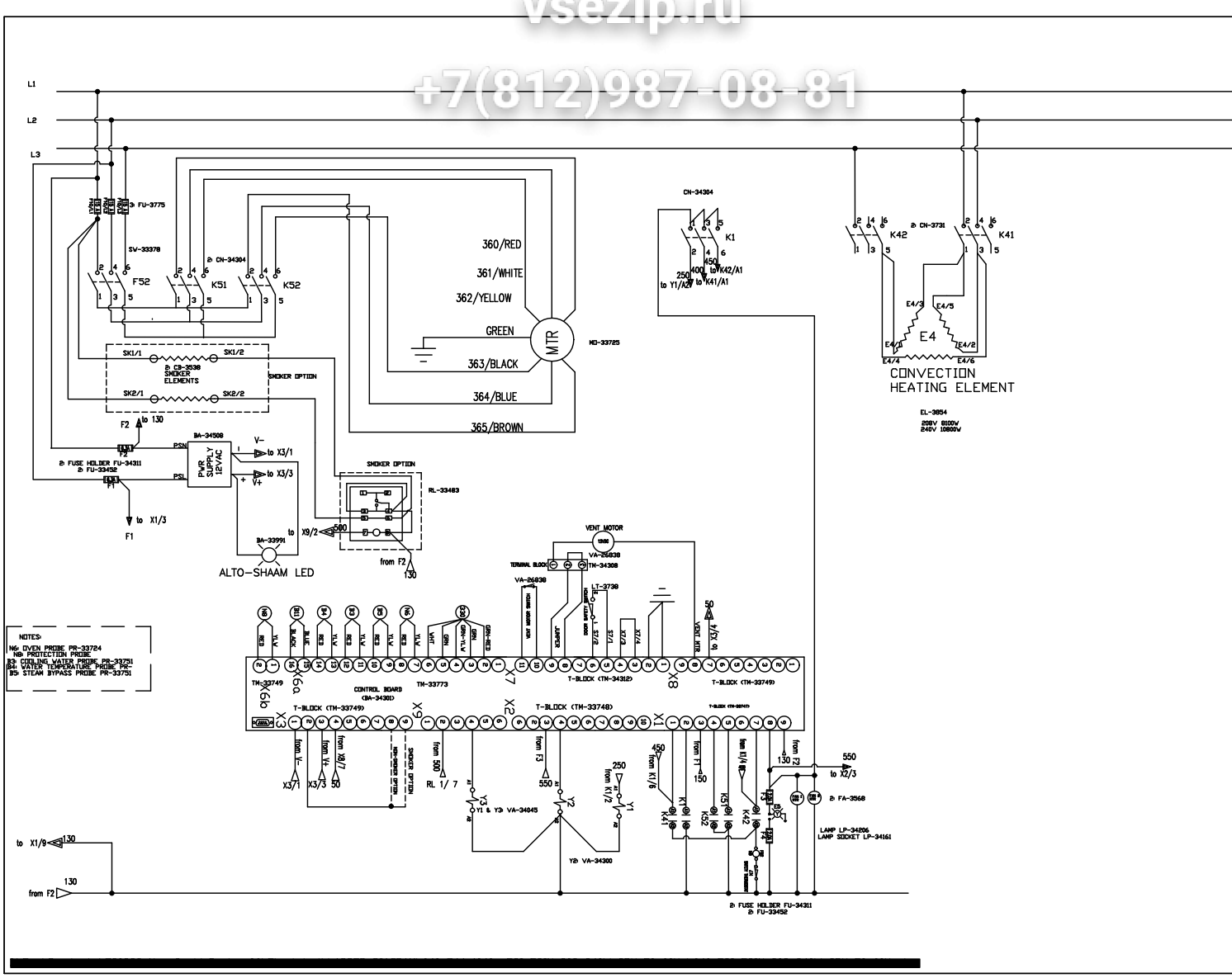

Зип Общепит
vsezip.ru
+7(812)987-08-81

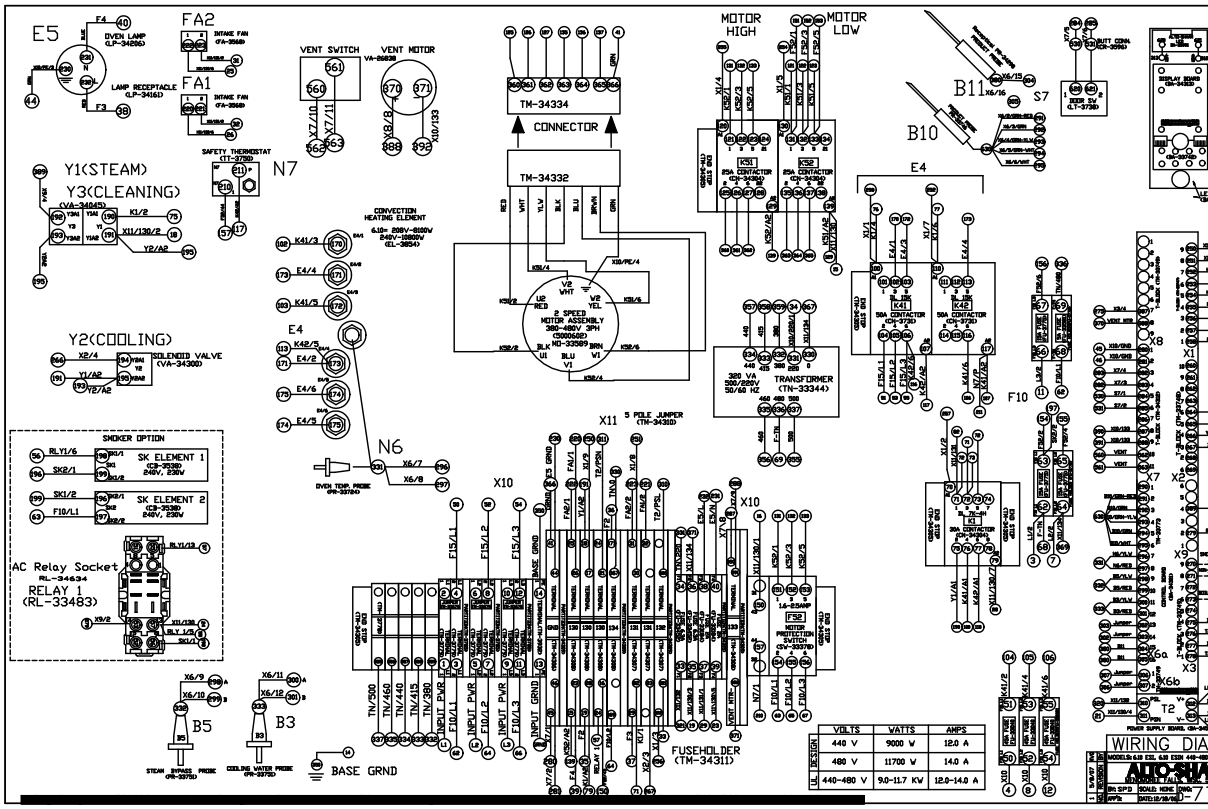

Зип Общепит
vsezip.ru
+7(812)987-08-81

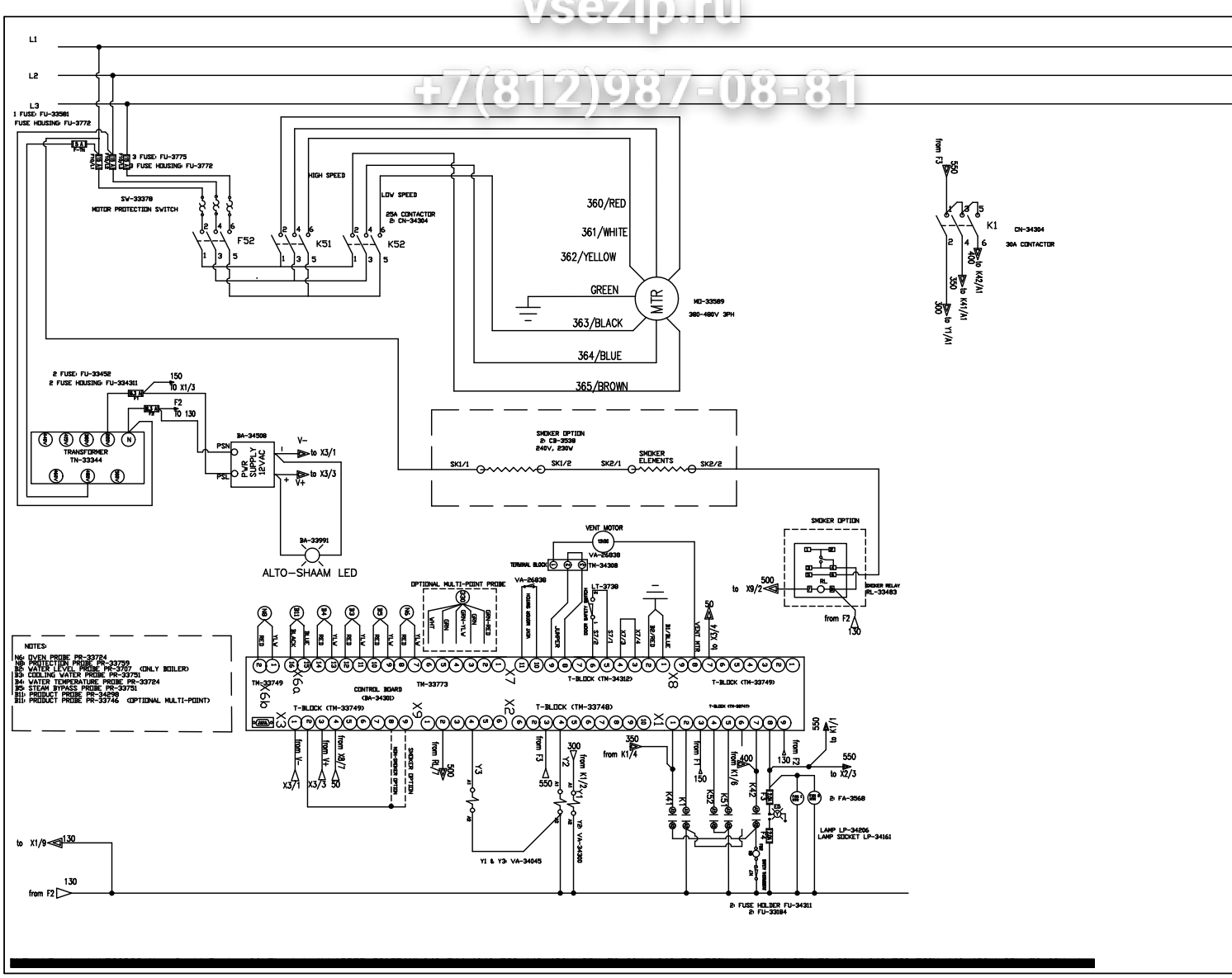

Зип Общепит
vsezip.ru
+7(812)987-08-81

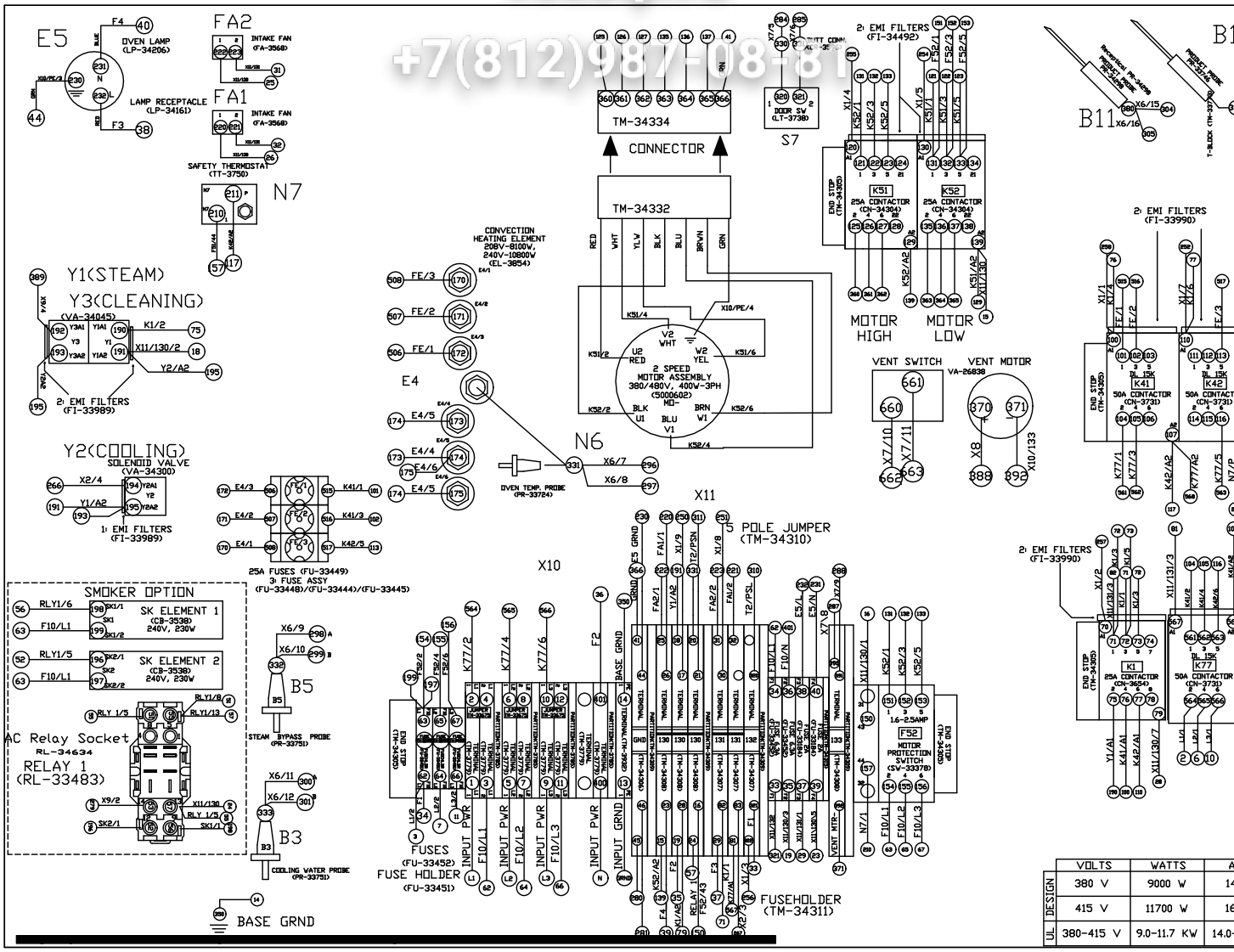

	VOLTS	WATTS	A
UL DESIGN	380 V	9000 W	14
	415 V	11700 W	16
	380-415 V	9.0-11.7 KW	14.0-

Зип Общепит
vsezip.ru
+7(812)987-08-81

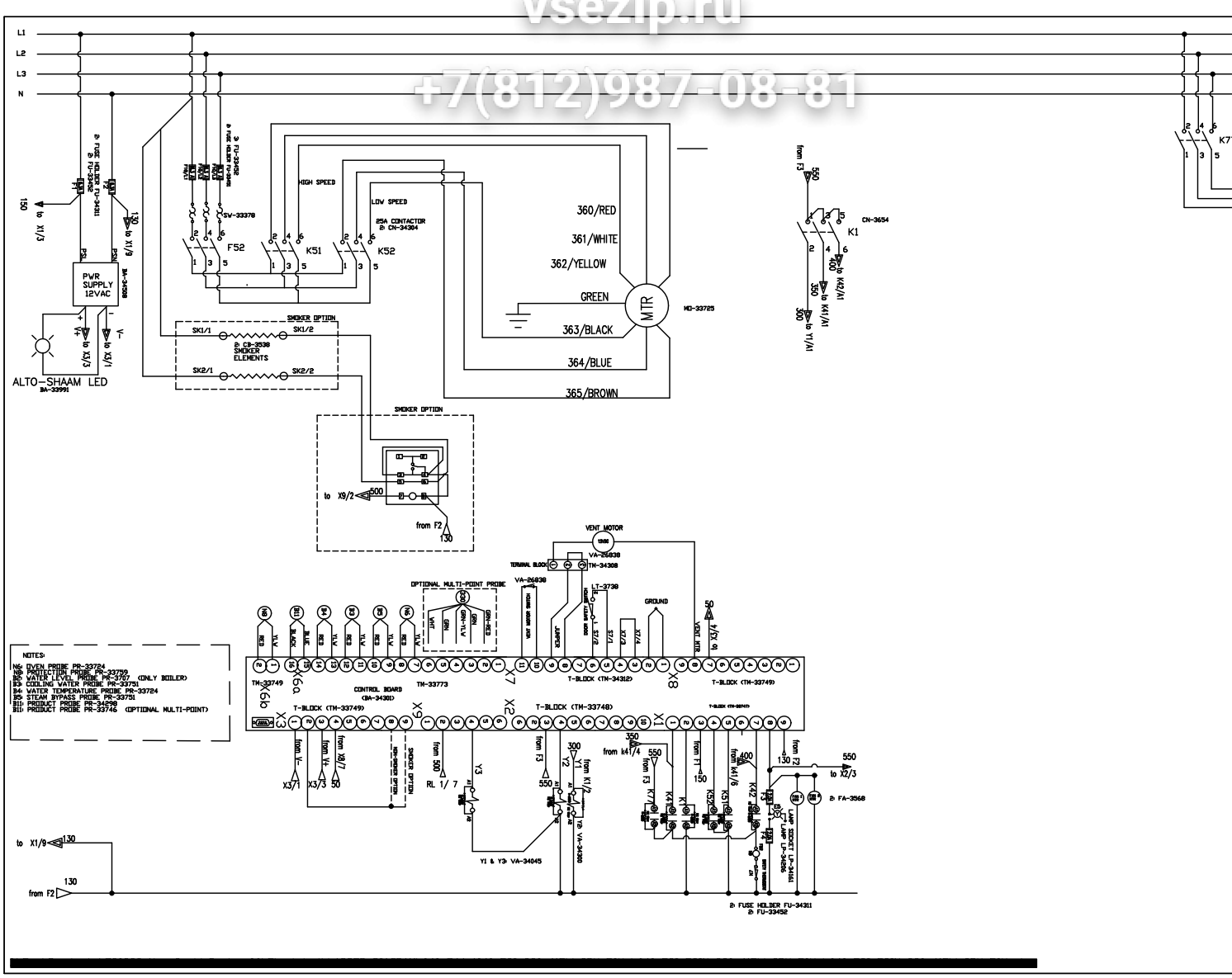

Зип Общепит
vsezip.ru
8(812)987-08-81

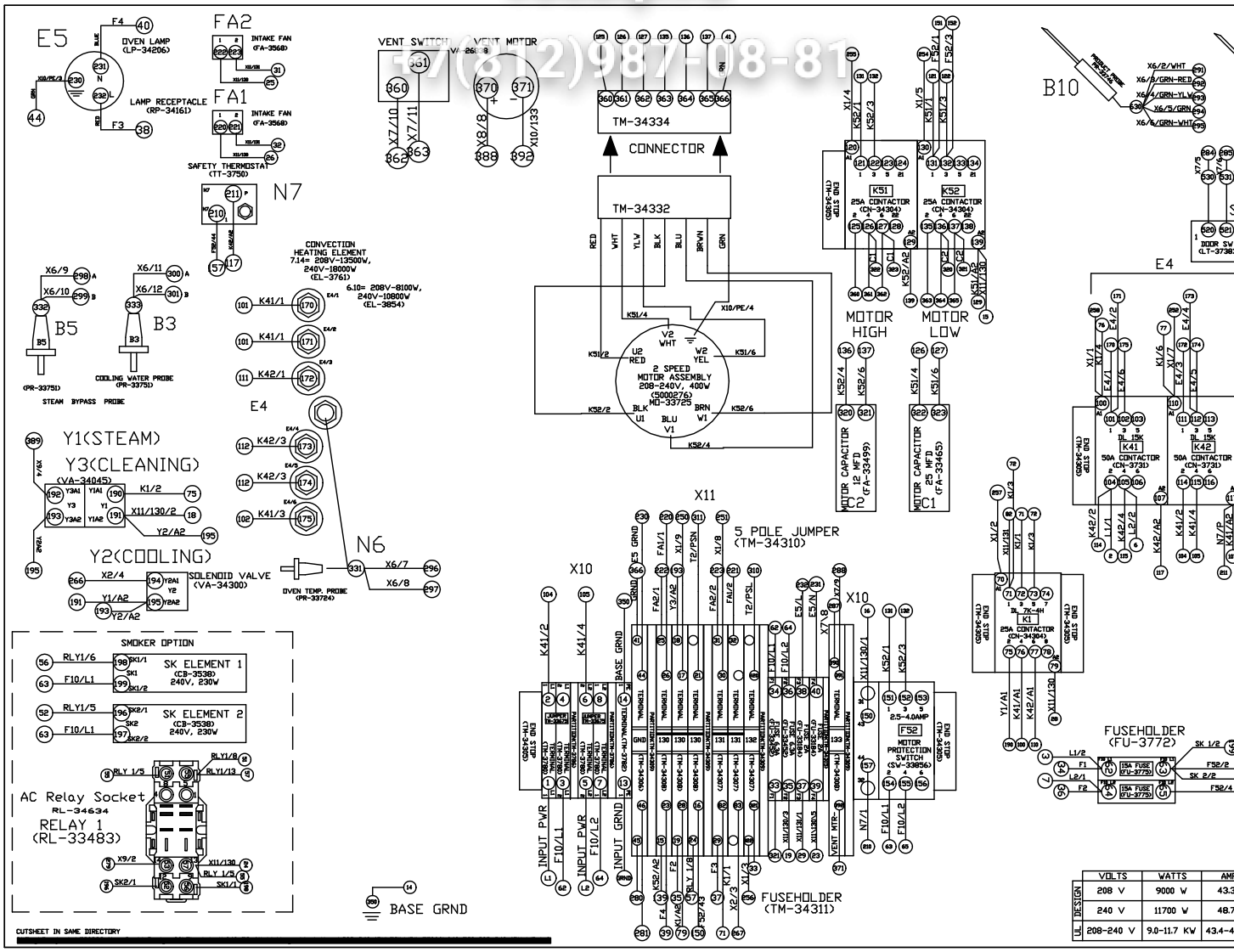

	VOLTS	WATTS	AMPS
DESIGN	208 V	9000 W	43.3
	240 V	11700 W	48.7
UL	208-240 V	9.0-11.7 KW	43.4-48.7

Зип Общепит
vsezip.ru
+7(812)987-08-81

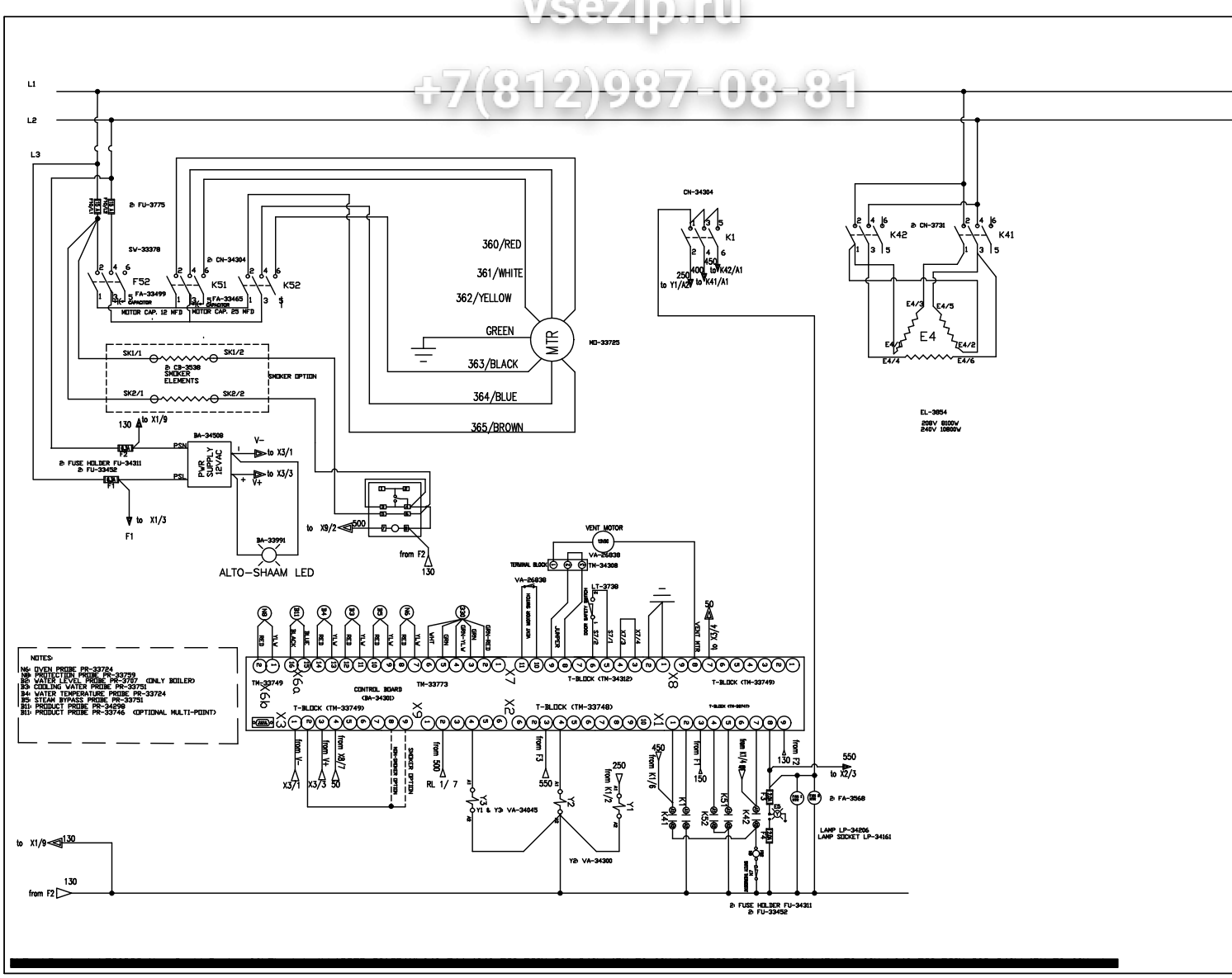

Зип Общепит
vsezip.ru
+7(812)987-08-81

SECTION CONTENTS

Technical Data 132

Parts Information 133
- Door Assembly 133
- Recessed Door Assembly 134
- Directional Panel Assembly 135
- Pressure Box Assembly 136

Wiring and Ladder Diagrams 137
- 208-240V 3PH 50/60 Hz Wiring 137
- 208-240V 3PH 50/60 Hz Ladder 138
- 440-480V 3PH 50/60 Hz Wiring 139
- 440-480V 3PH 50/60 Hz Ladder 140
- 380-415V 3PH 50 Hz Wiring 141
- 380-415V 3PH 50 Hz Ladder 142
- 208-240V 1PH 50/60 Hz Wiring 143
- 208-240V 1PH 50/60 Hz Ladder 144

Return to Main Table of Contents 3

Зип Общепит
vsezip.ru
+7(812)987-08-81

6•10 ESiN SPECIFICATIONS

ALTO SHAAM COMBITHERM

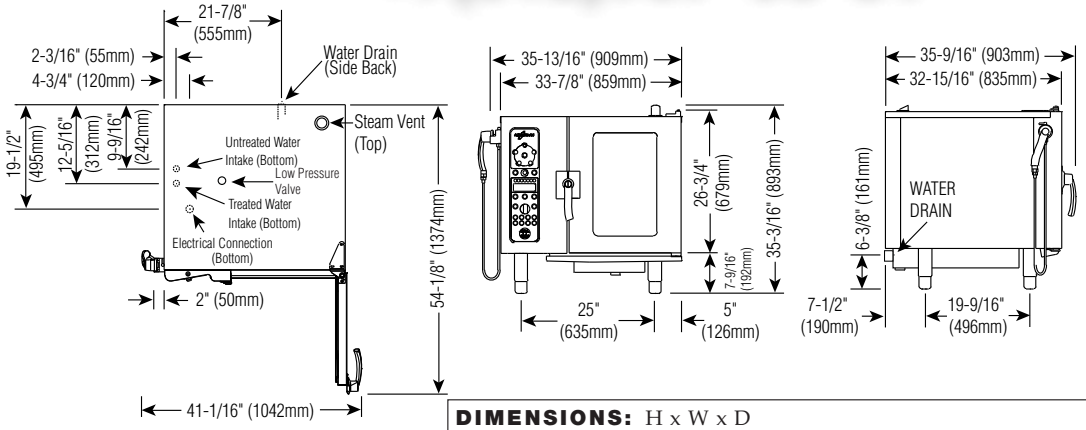

DIMENSIONS: H x W x D

EXTERIOR:
35-3/16" x 35-13/16" x 35-9/16" (893mm x 909mm x 903mm)

EXTERIOR WITH RETRACTABLE DOOR:
35-3/16" x 39-13/16" x 35-9/16" (893mm x 1011mm x 903mm)

INTERIOR:
17-3/4" x 13-1/4" x 26-1/4" (450mm x 387mm x 665mm)

INSTALLATION REQUIREMENTS

Oven must be installed level.
Hood installation is required.
Water supply shut-off valve and back-flow preventer.

WATER REQUIREMENTS

TWO (2) COLD WATER INLETS - DRINKING QUALITY

ONE (1) TREATED WATER INLET:	3/4" NPT*	
ONE (1) UNTREATED WATER INLET:	3/4" NPT*	
LINE PRESSURE:	30 to 90 psi	2.8 to 6.2 bar

WATER DRAIN: 1-1/2" CONNECTION WITH AIR GAP

* Can manifold off of one 3/4" line.

CLEARANCE REQUIREMENTS

LEFT: 6" (152mm) PLUS SERVICE ACCESS: 18" (457mm) RECOMMENDED
20" (508mm) FROM HEAT PRODUCING EQUIPMENT

RIGHT: 4" (102mm) TOP: 20" (508mm) FOR AIR MOVEMENT

BACK: 4" (102mm) BOTTOM: 5-1/8" (130mm) FOR LEGS

COUNTER-TOP INSTALLATIONS MUST MAINTAIN 4" (102mm) MINIMUM CLEARANCE FROM COUNTER SURFACE.

WATER QUALITY MINIMUM STANDARDS

USING A WATER SUPPLY NOT MEETING ALTO-SHAAM'S MINIMUM WATER QUALITY STANDARDS WILL VOID THIS WARRANTY. It is the responsibility of the purchaser to ensure that incoming water supply is compliant with the specifications listed through adequate treatment measures. Installation of the CombiGuard™ Water Filtration System is recommended, but this system may not address all water quality issues present.

Contaminant	Inlet Water Requirements (untreated water)
Free Chlorine	Less than 0.1 ppm (mg/L)
Hardness	Less than 3 gpg (52 ppm)
Chloride	Less than 30 ppm (mg/L)
pH	7.0 to 8.5
Alkalinity	Less than 50 ppm (mg/L)
Silica	Less than 12 ppm (mg/L)
Total Dissolved Solids (tds)	Less than 60 ppm

ELECTRICAL

	VOLTAGE	PHASE	CYCLE/HZ	AWG	6•10 ESiN AMPS	6•10 ESiN kW	6•10 ESiN/sk AMPS	6•10 ESiN/sk kW
208-240	at 208	1*	50/60	2 Wire plus ground	41.0	8.5	43.3	9.0
	at 240			AWG 6	47.0	11.2	48.0	11.7
208-240	at 208	3	50/60	3 Wire plus ground	23.3/ph	8.4	25.0/ph	9.0
	at 240			AWG 8	27.0/ph	11.2	28.2/ph	11.7
380-415	at 380	3	50/60	4 Wire plus ground	13.0/ph	8.5	14.0/ph	9.0
	at 415			AWG 12	15.6/ph	11.2	16.3/ph	11.7
440-480	at 440	3*	50/60	3 Wire plus ground	20.0/ph	15.4	21.0/ph	15.9
	at 480			AWG 8	22.0/ph	18.4	23.0/ph	18.9

* ELECTRICAL SERVICE CHARGE APPLIES

WEIGHT

NET	348 lb	(158 kg)
SHIP	472 lb	(214 kg)
CRATE DIMENSIONS:	40" x 37" x 40" EST.	(1016 x 940 x 1016mm)

CAPACITY

	6•10 ESiN	6•10 ESiN/sk
FULL-SIZE PANS: 20" x 12" x 2-1/2"	Six (6)	Four (4)
GN 1/1: 530 x 325 x 65mm	Six (6)	Four (4)
HALF-SIZE PANS: 10" x 12" x 2-1/2"	Twelve (12)	Eleven (11)
GN 1/2: 265 x 325 x 65mm	Twelve (12)	Eleven (11)
HALF-SIZE SHEET PANS:* 18" x 13" x 1" ON WIRE SHELVES ONLY	Six (6)	Five (5)

72 lb (33 kg) MAXIMUM

VOLUME MAXIMUM: 45 QUARTS (57 LITERS)

*ADDITIONAL WIRE SHELVES REQUIRED FOR MAXIMUM CAPACITY

ELECTRIC COMBITHERM — INSTALLATION MANUAL #7001

ЗипОбщепит
vsezip.ru
+7(812)987-08-81

DOOR ASSEMBLY

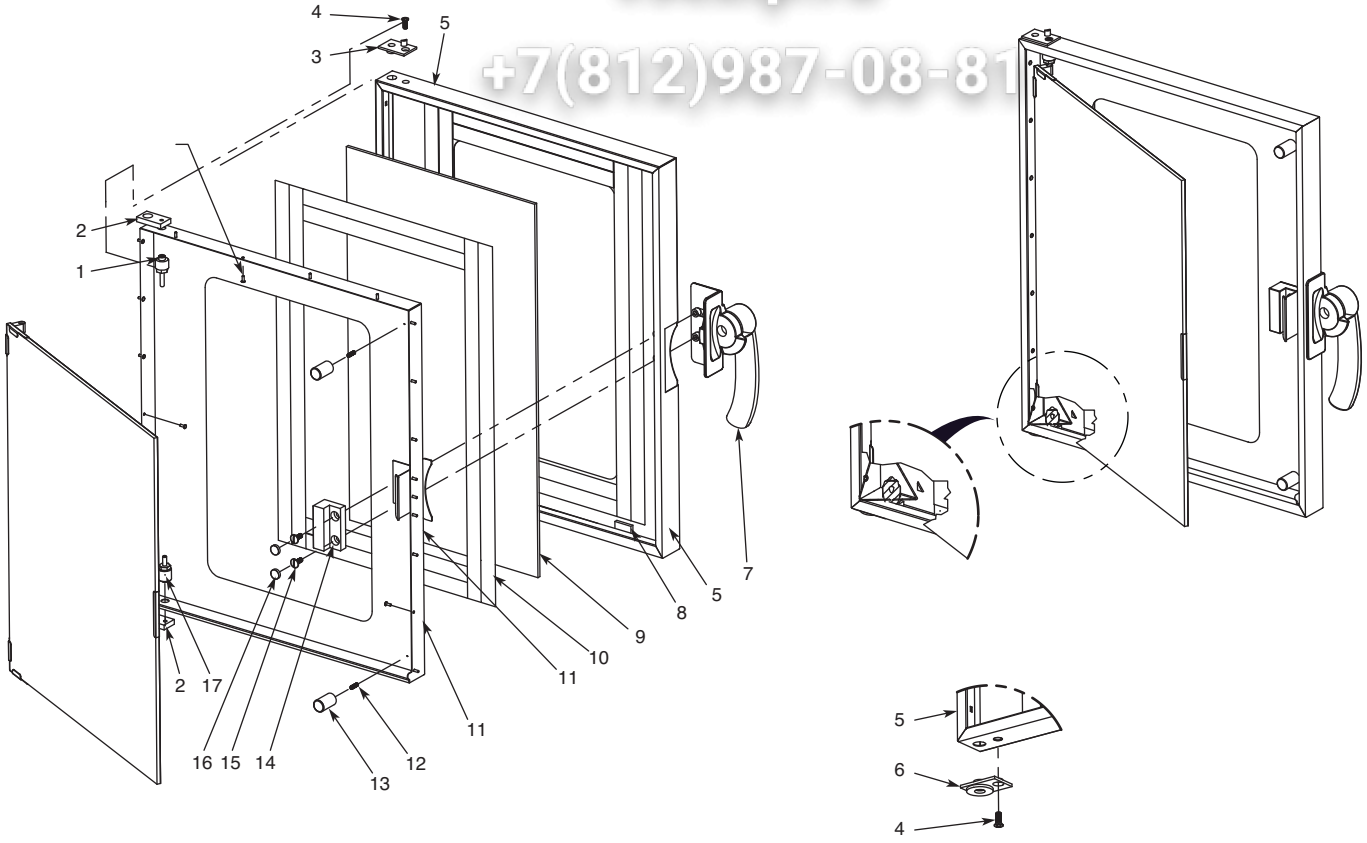

Hinge Detail

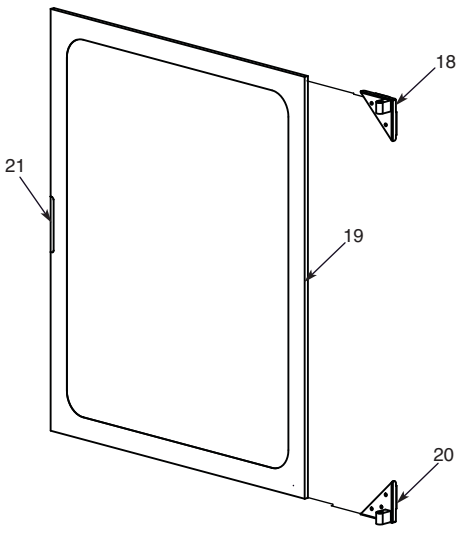

Item	Part	Description	Qty.
1	PI-26973	Pin, Upper	1
2	HG-25078	Hinge, CT, Anchor, ML Combis	2
3	HG-25077	Hinge, CT, Top Stop, ML Combi	1
4	SC-22282	Screw, CT, 1.0X 16 mm, Ph Oval, Hd N/S 18-8, DIN #966a	2
5	1006287	Outer Panel, Door	1
6	HG-25079	Hinge, CT, Upper Ratchet, Combi	1
7	HD-26966	Handle, Door, Right, Combi '06	1
8	BM-27116	Bumper	2
9	GL-27226	Glass, Outer, 6.10 Narrow	1
10	TA-25125	Tape, Double Sided	2
11	5005084	Inner Door Spot Right-Hand 6.10 Narrow	1
12	SC-25091	Screw, CT, M5 x 16, DIN 551, A2 S/S, Sltd Set Screw Flat Pt	2
13	BM-27146	Bumper Stop/Inner Door	2
14	SP-27212	Spacer, Window Latch	1
15	SC-27125	Screw, Truss Head, S/S	2
16	PG-24789	Plug, 15 mm	2
17	PI-26974	Pin, Lower	1
18	HG-27217	Lower Hinge Assembly	1
19	GL-27227	Glass, Inner, 6.20 INEP	1
20	HG-27218	Upper Hinge Assembly	1
21	LT-25394	Latch, CT, ML, 7.1 ML	1

ЭлитОбщепит
vsezip.ru
+7(812)987-08-81

RECESSED DOOR ASSEMBLY

(Contact factory.)

ЗипОбщепит
vsezip.ru
+7(812)987-08-81

DIRECTIONAL PANEL ASSEMBLY

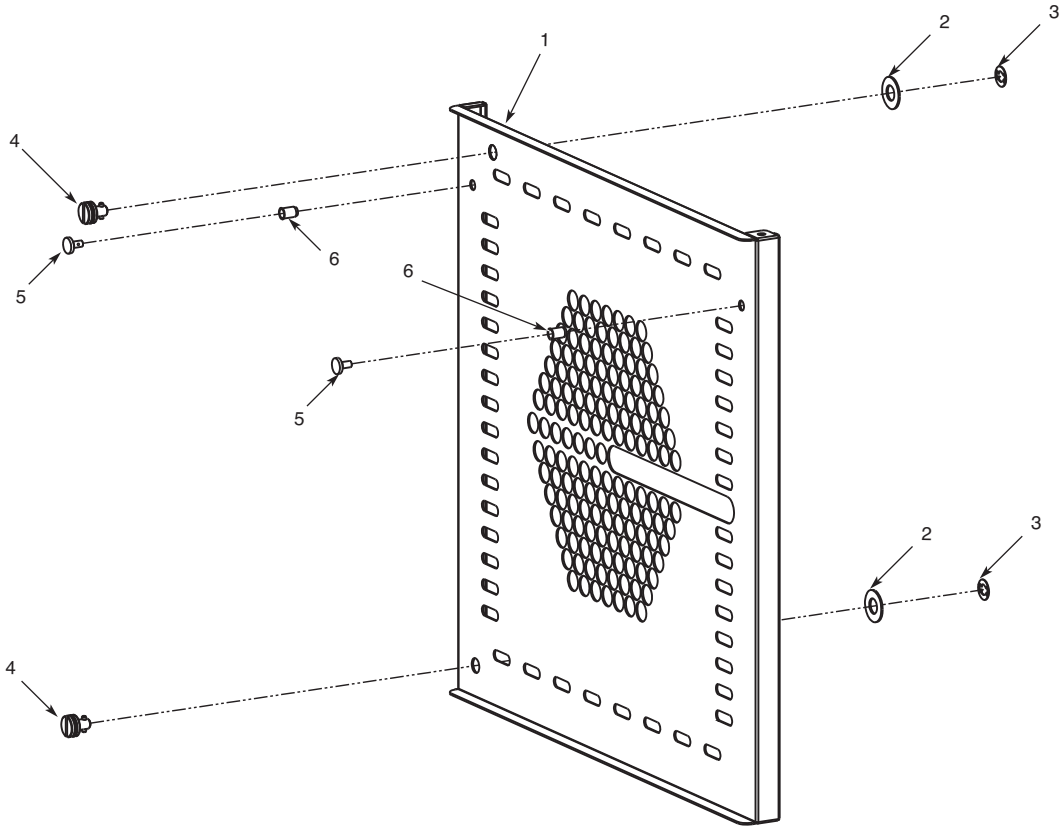

Item	Part	Description	Qty.
1	1005297	Directional Panel	1
2	1006601	Directional Panel Spacer	2
3	WS-24090	Holding (Lock Clip)	2
4	CL-24089	Clip, CT, ML, Lock, W/3 Washers	2
5	SC-22753	Screw, SS Round, Hanging Rack	2
6	NU-22770	Nut, Threaded Insert, M6	2

ЗиПОбщепит
vsezip.ru
+7(812)987-08-81

PRESSURE BOX ASSEMBLY

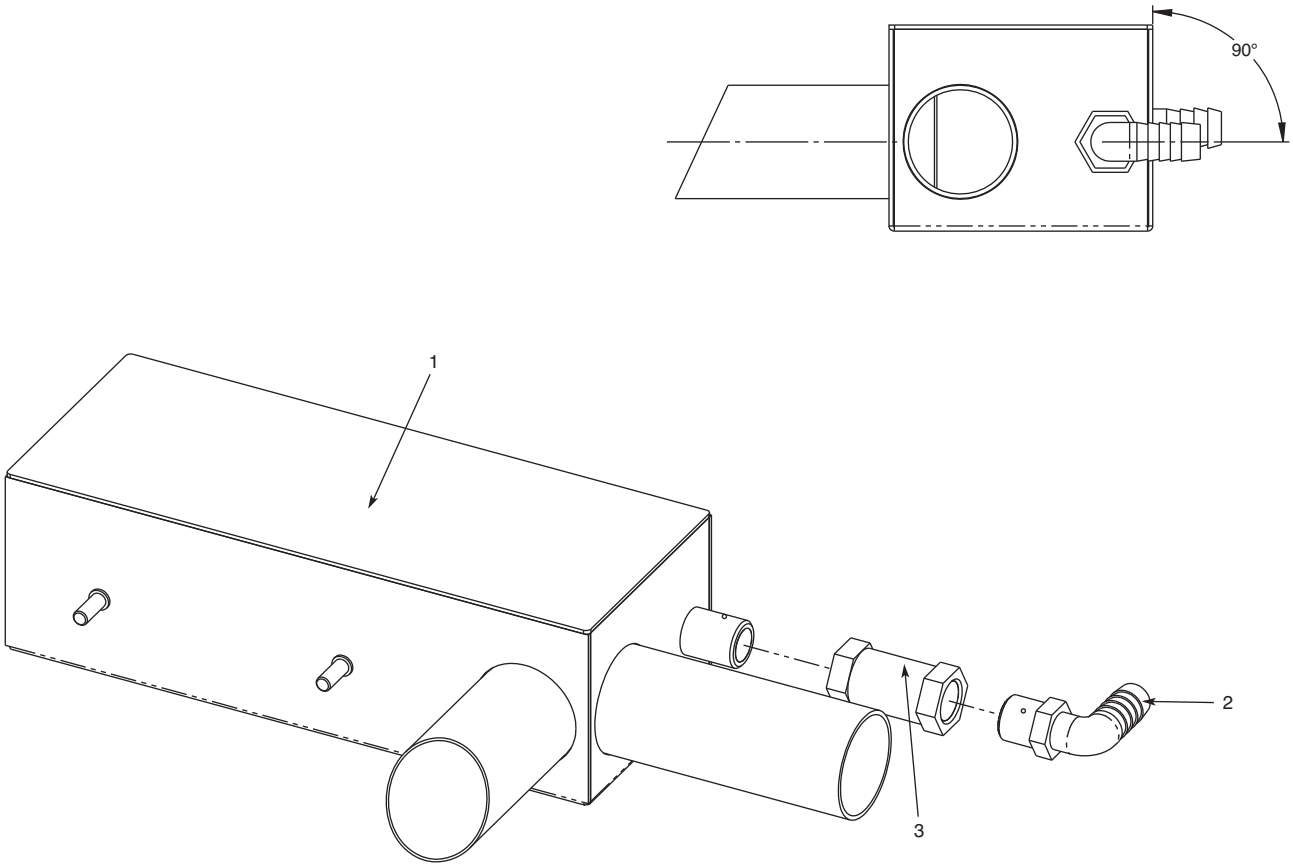

Item	Part	Description	Qty.
1	5005009	Pressure Box	1
2	EB-25551	Elbow, Nylon, 1/2" x 3/8"	1
3	VA-25549	Valve, 3/8", Flow Control, 0.12 GPM	1

Зип Общепит
vsezip.ru
+7(812)987-08-81

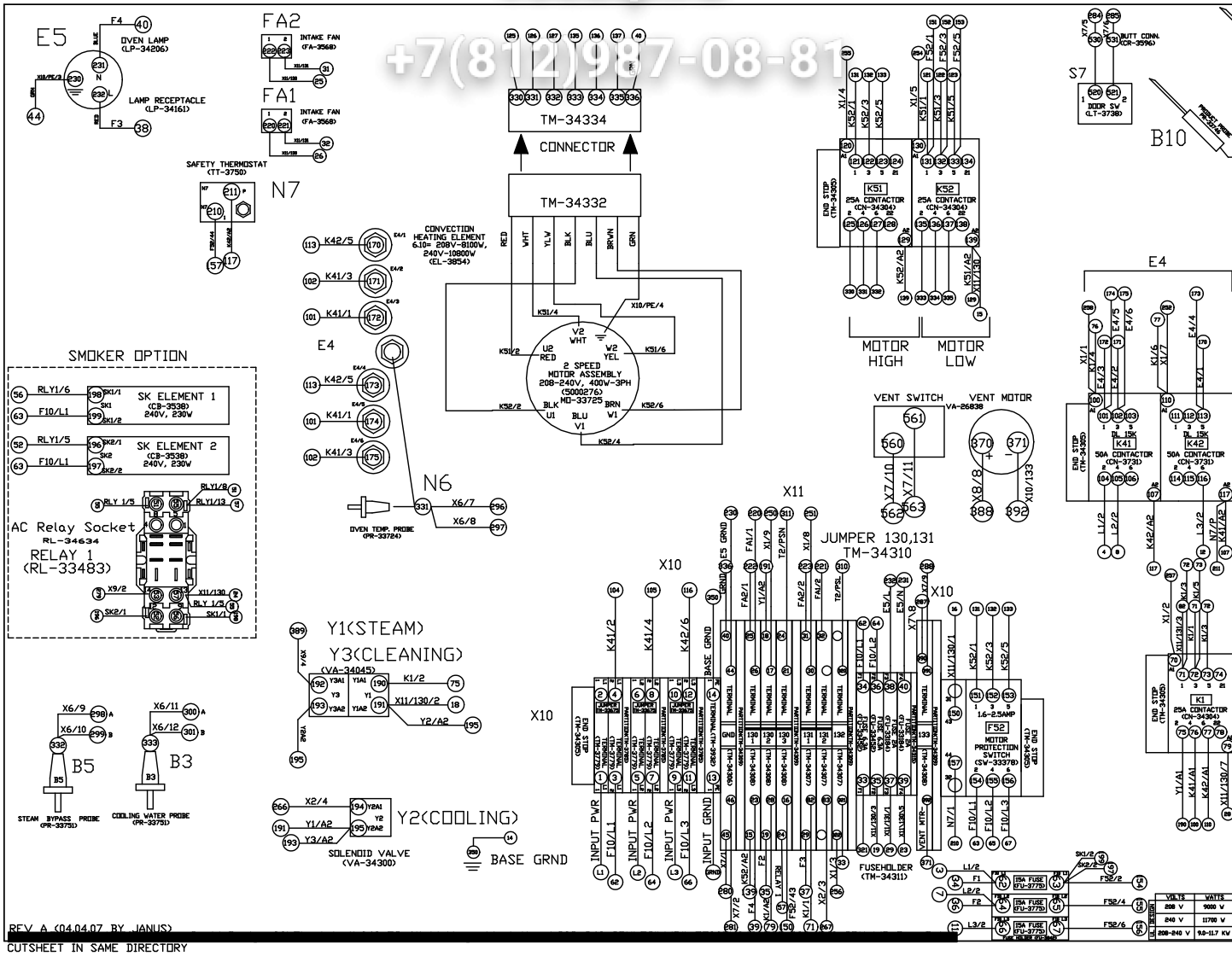

REV A (04.04.07 BY JANUS)
CUTSHEET IN SAME DIRECTORY

Зип Общепит
vsezip.ru
+7(812)987-08-81

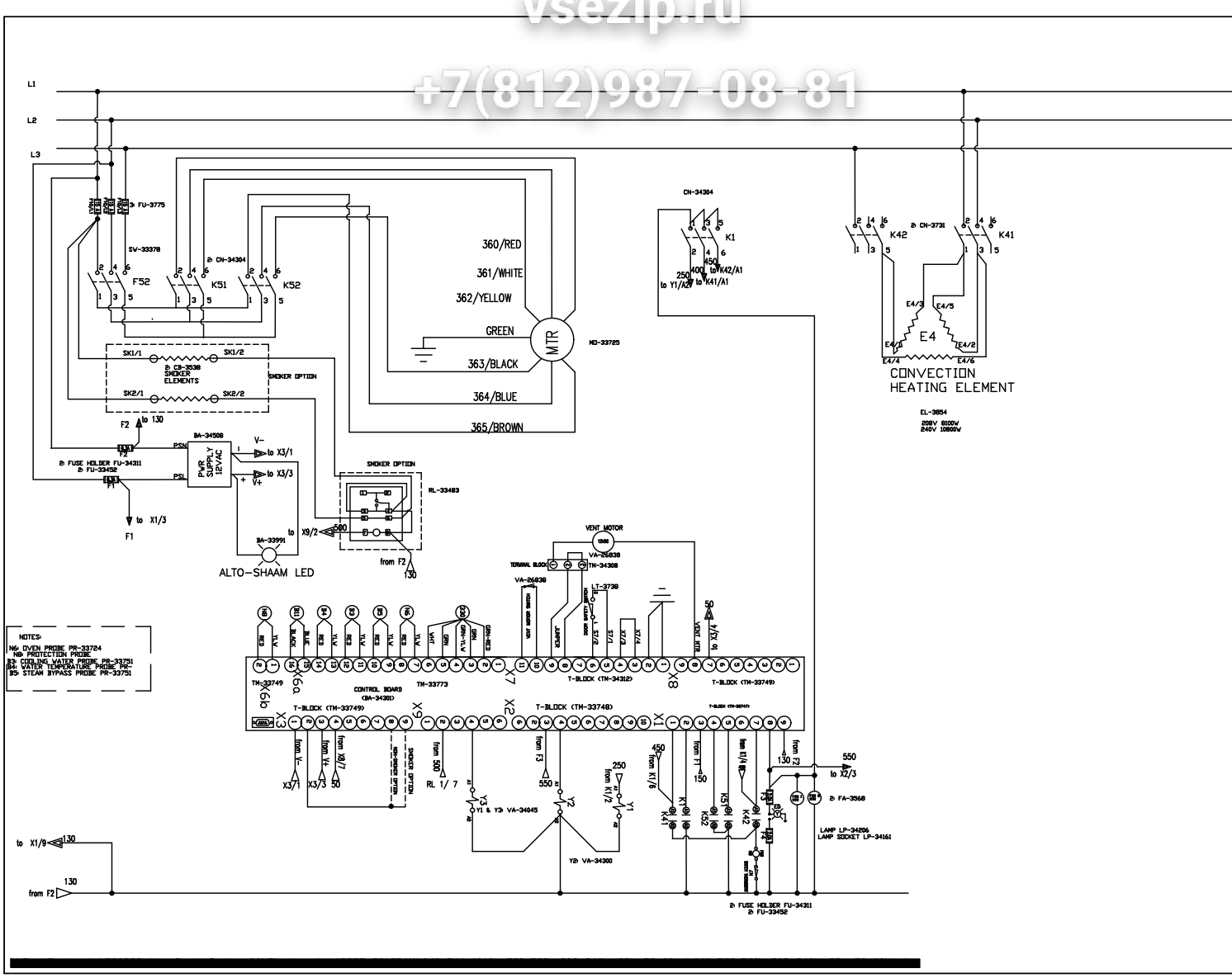

Зип Общепит
vsezip.ru
+7(812)987-08-81

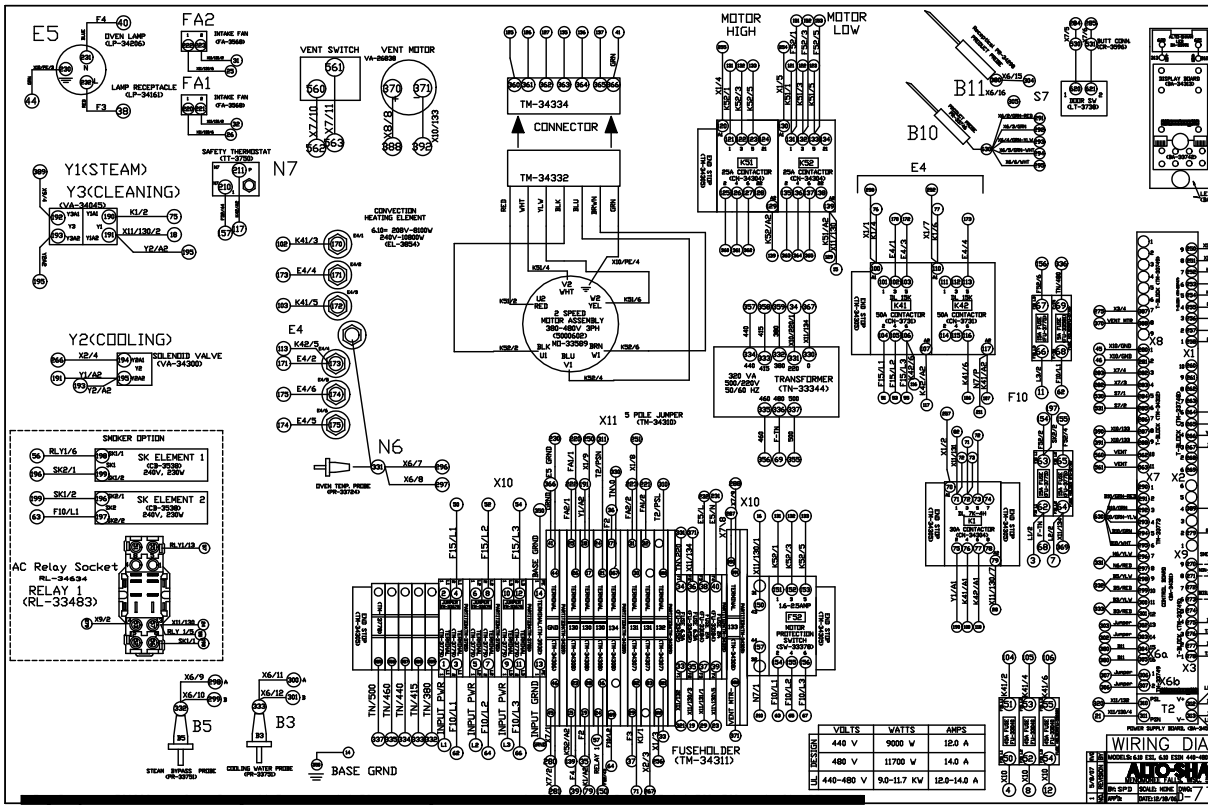

Зип Общепит
vsezip.ru
+7(812)987-08-81

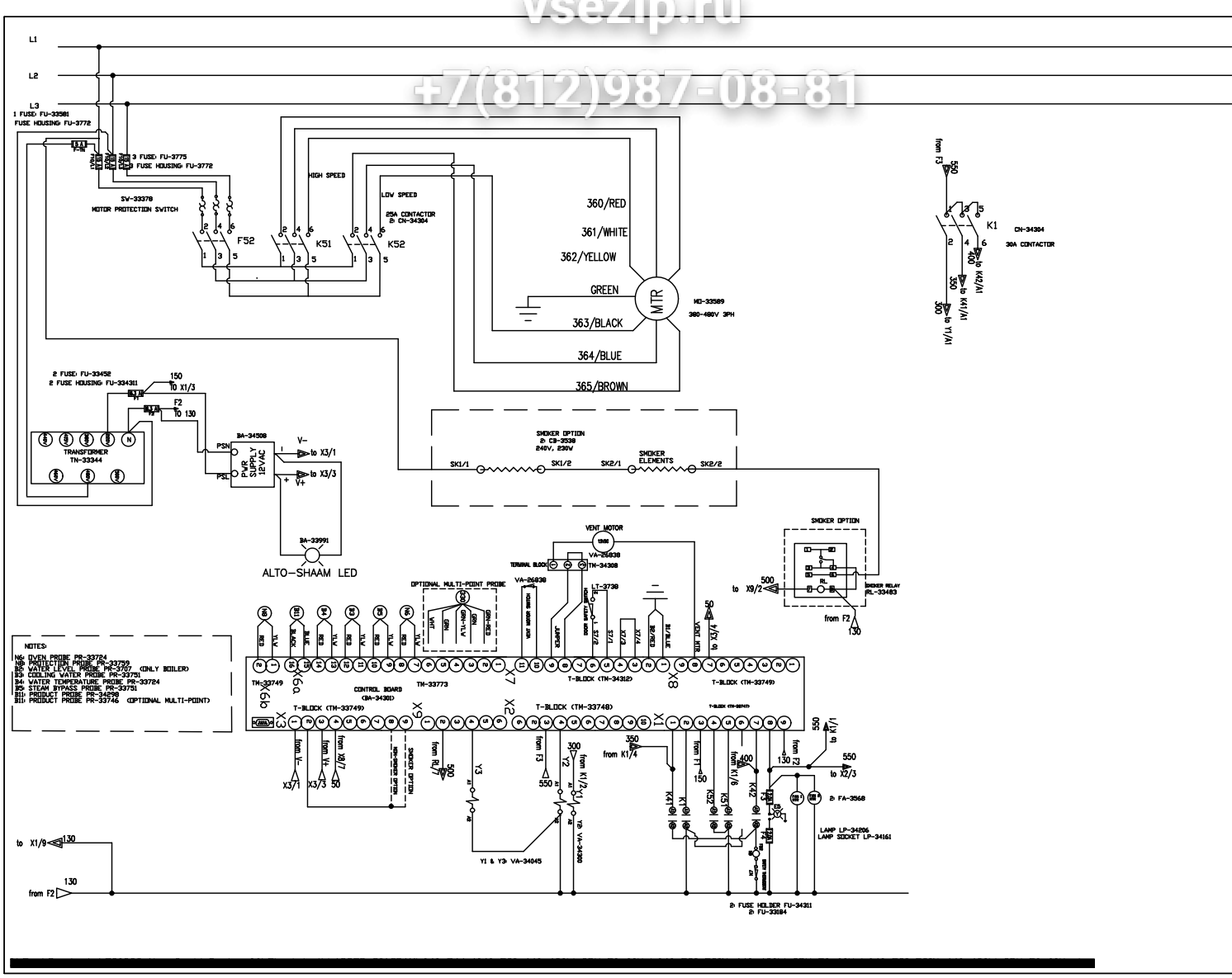

Зип Общепит
vsezip.ru
+7(812)987-08-81

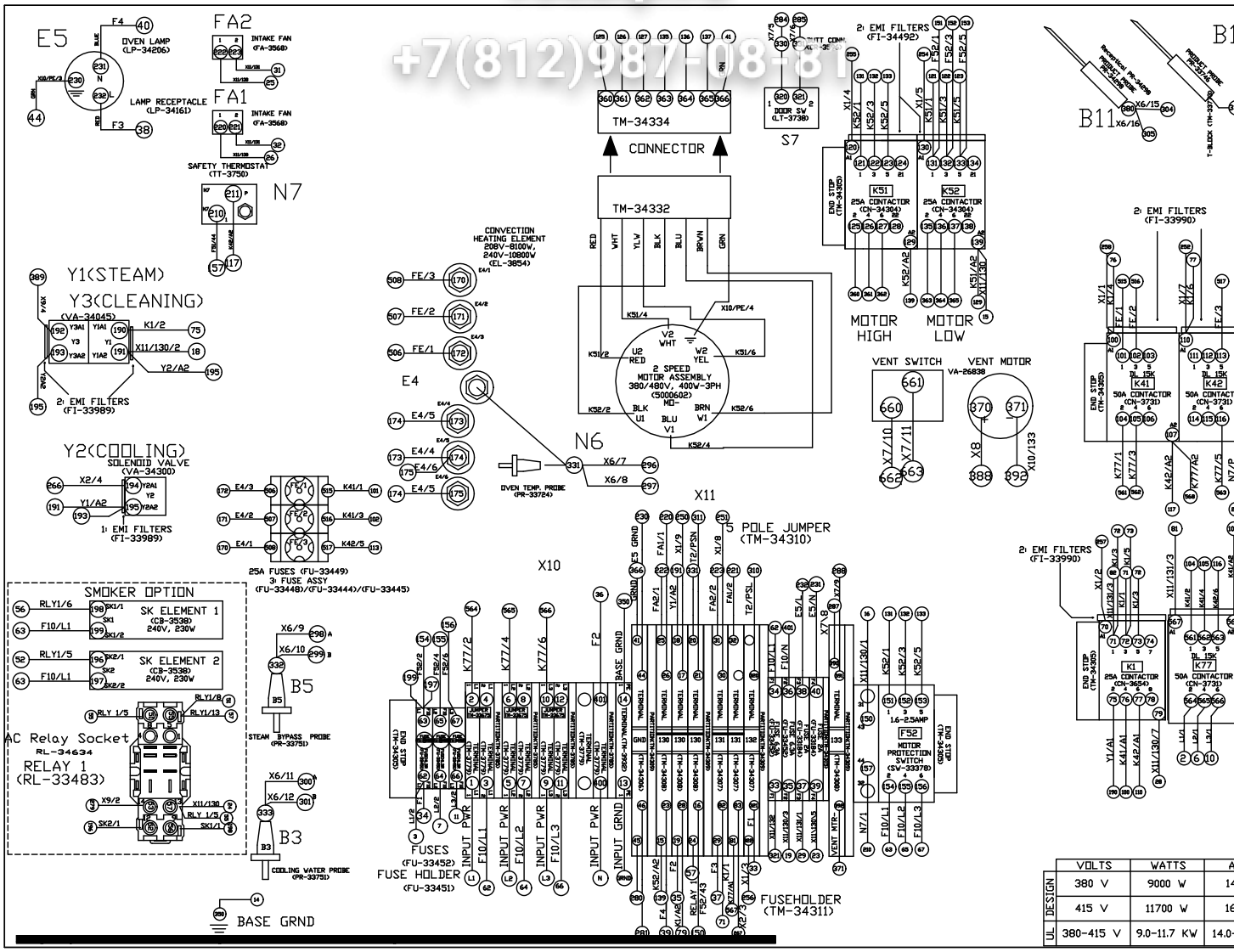

	VOLTS	WATTS	A
UL DESIGN	380 V	9000 W	14
	415 V	11700 W	16
	380-415 V	9.0-11.7 KW	14.0-

Зип Общепит
vsezip.ru
+7(812)987-08-81

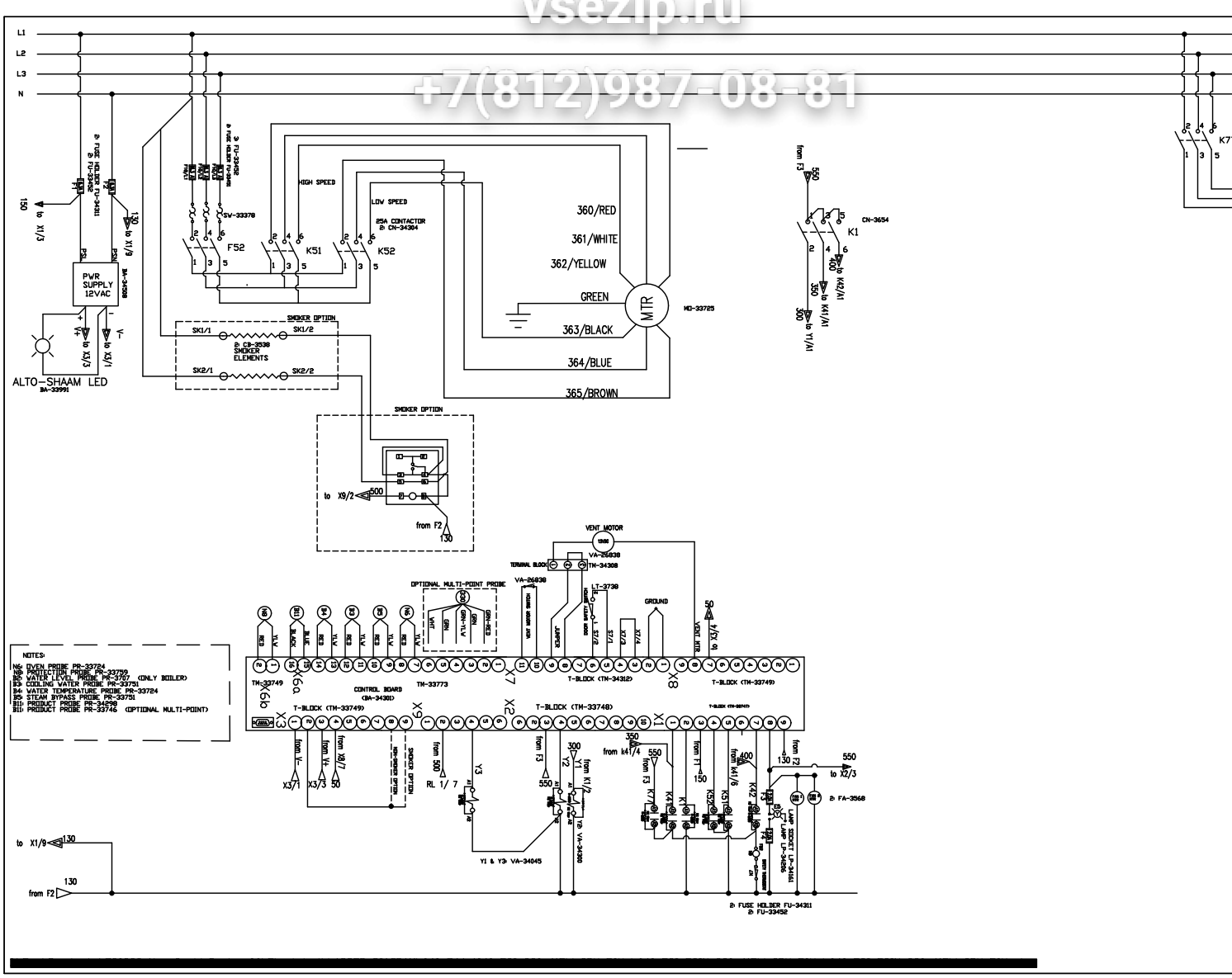

Зип Общепит
vsezip.ru
8(812)987-08-81

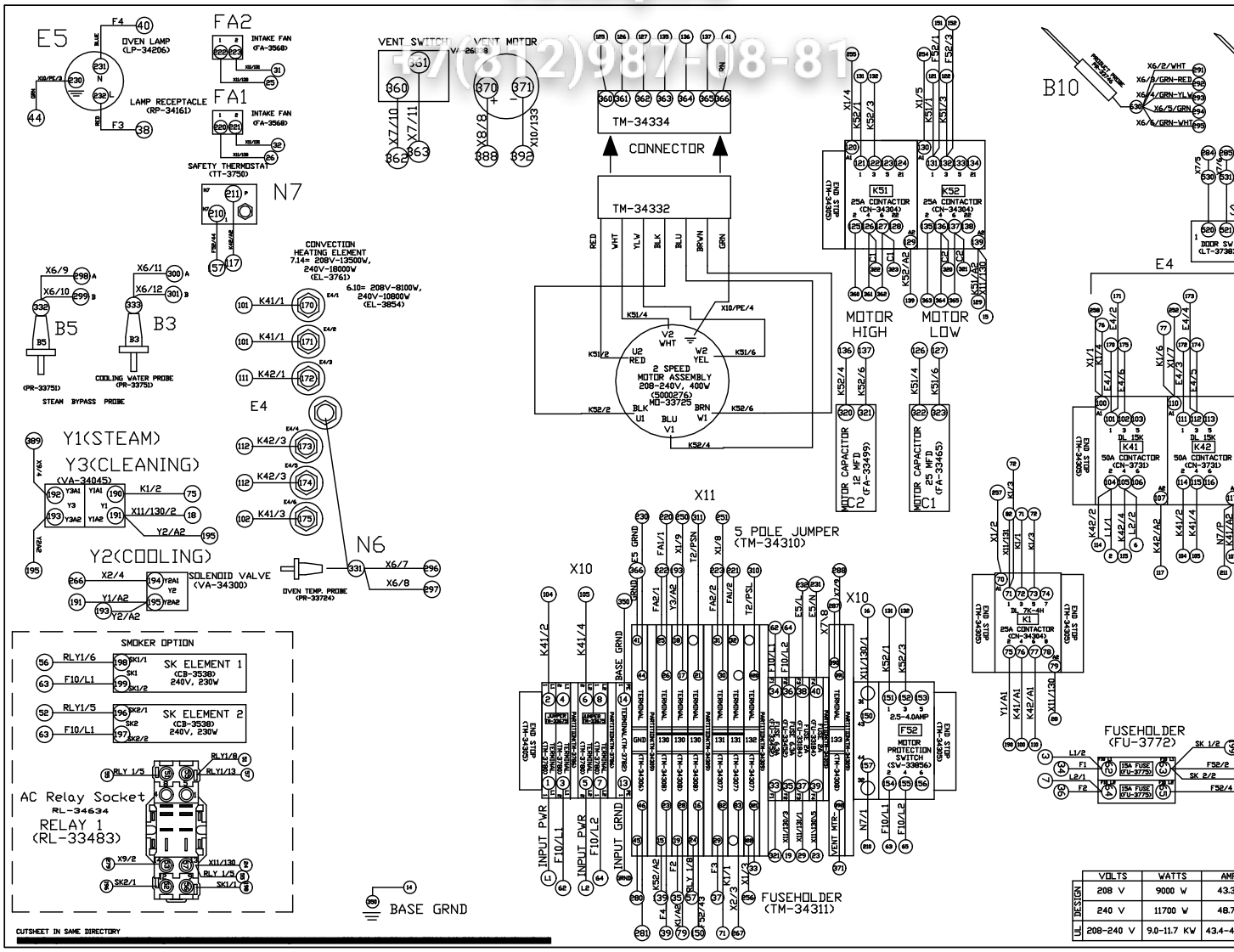

	VOLTS	WATTS	AMPS
DESIGN	208 V	9000 W	43.3
	240 V	11700 W	48.7
UL	208-240 V	9.0-11.7 KW	43.4-48.7

Зип Общепит
vsezip.ru
+7(812)987-08-81

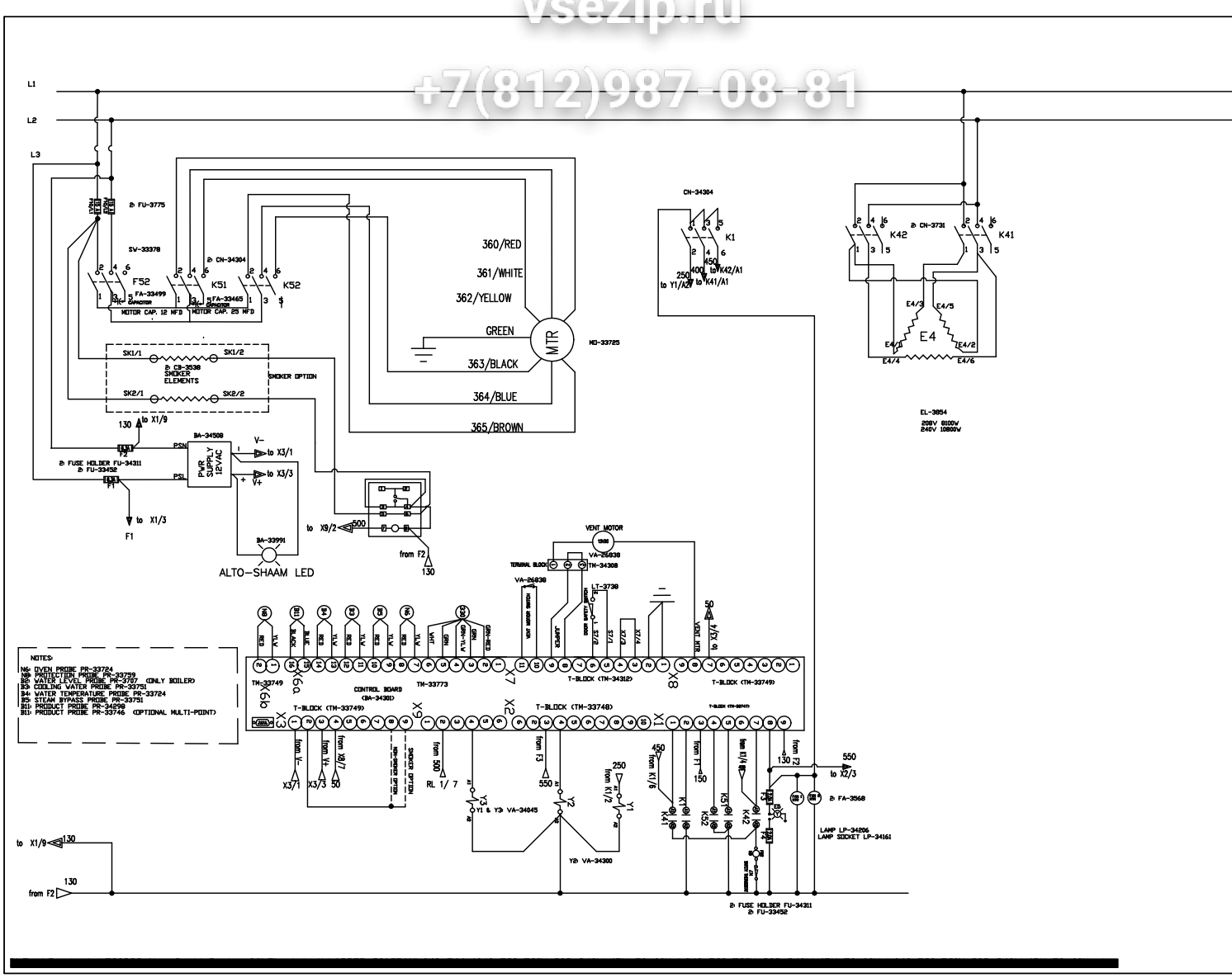

Зип Общепит
vsezip.ru
+7(812)987-08-81

SECTION CONTENTS

Technical Data 146

Parts Information 147
- Door Assembly 147
- Recessed Door Assembly 148
- Directional Panel Assembly 149
- Steam Generator Assembly 150

Wiring and Ladder Diagrams 151
- 208-240V 3PH 50/60 Hz Wiring 151
- 208-240V 3PH 50/60 Hz Ladder 152
- 440-480V 3PH 50/60 Hz Wiring 153
- 440-480V 3PH 50/60 Hz Ladder 154
- 380-415V 3PH 50 Hz Wiring 155
- 380-415V 3PH 50 Hz Ladder 156
- 208-240V 1PH 50/60 Hz Wiring 157
- 208-240V 1PH 50/60 Hz Ladder 158

Return to Main Table of Contents 3

Зип Общепит
vsezip.ru
+7(812)987-08-81

ALTO SHAAM COMBITHERM

10•10ES SPECIFICATIONS

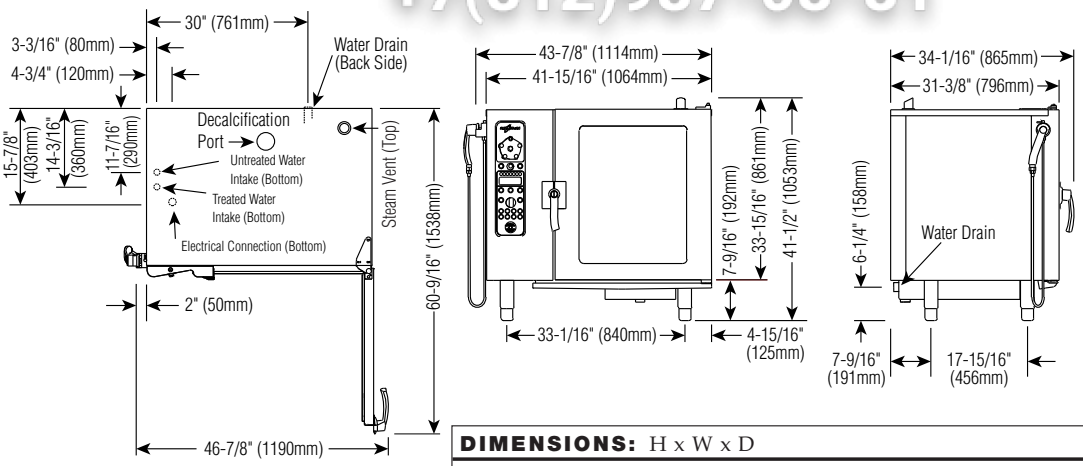

INSTALLATION REQUIREMENTS

Oven must be installed level.
Hood installation is required.
Water supply shut-off valve and back-flow preventer.

DIMENSIONS: H x W x D

EXTERIOR:
41-1/2" x 43-7/8" x 34-1/16" (1053mm x 1114mm x 865mm)

EXTERIOR WITH RETRACTABLE DOOR:
41-1/2" x 47-7/8" x 34-1/16" (1053mm x 1216mm x 865mm)

INTERIOR:
27" x 23-1/2" x 21-1/16" (685mm x 597mm x 535mm)

WATER REQUIREMENTS

TWO (2) COLD WATER INLETS - DRINKING QUALITY

ONE (1) TREATED WATER INLET: 3/4" NPT*
ONE (1) UNTREATED WATER INLET: 3/4" NPT*
LINE PRESSURE: 30 to 90 psi 2.8 to 6.2 bar

WATER DRAIN: 1-1/2" CONNECTION WITH AIR GAP

* Can manifold off of one 3/4" line.

WATER QUALITY MINIMUM STANDARDS

USING A WATER SUPPLY NOT MEETING ALTO-SHAAM'S MINIMUM WATER QUALITY STANDARDS WILL VOID THIS WARRANTY. It is the responsibility of the purchaser to ensure that incoming water supply is compliant with the specifications listed through adequate treatment measures. Installation of the CombiGuard™ Water Filtration System is recommended, but this system may not address all water quality issues present.

Contaminant	Inlet Water Requirements (untreated water)
Free Chlorine	Less than 0.1 ppm (mg/L)
Hardness	Less than 3 gpg (52 ppm)
Chloride	Less than 30 ppm (mg/L)
pH	7.0 to 8.5
Alkalinity	Less than 50 ppm (mg/L)
Silica	Less than 12 ppm (mg/L)
Total Dissolved Solids (tds)	Less than 60 ppm

CLEARANCE REQUIREMENTS

LEFT: 6" (152mm) PLUS SERVICE ACCESS: 18" (457mm) RECOMMENDED
20" (508mm) FROM HEAT PRODUCING EQUIPMENT
RIGHT: 4" (102mm) TOP: 20" (508mm) FOR AIR MOVEMENT
BACK: 4" (102mm) BOTTOM: 5-1/8" (130mm) FOR LEGS

COUNTER-TOP INSTALLATIONS MUST MAINTAIN 4" (102mm) MINIMUM CLEARANCE FROM COUNTER SURFACE.

ELECTRICAL

	VOLTAGE	PHASE	CYCLE/HZ	AWG	AMPS	kW
208-240	at 208	1*	50/60	2 Wire plus ground	67.0	13.9
	at 240			AWG 3	77.0	18.4
208-240	at 208	3	50/60	3 Wire plus ground	38.5/ph	13.8
	at 240			AWG 6	44.0/ph	18.3
380-415	at 380	3	50/60	4 Wire plus ground	21.5/ph	14.2
	at 415			AWG 10	25.6/ph	18.4
440-480	at 440	3*	50/60	3 Wire plus ground	20.0/ph	15.4
	at 480			AWG 8	22.0/ph	18.4

* ELECTRICAL SERVICE CHARGE APPLIES

WEIGHT

NET	404 lb	(183 kg)
SHIP	528 lb	(239 kg)
CRATE	49" x 47" x 37" EST.	
DIMENSIONS:	(1245 x 1194 x 940mm)	

CAPACITY

FULL-SIZE PANS:	20" x 12" x 2-1/2"	Ten (10)
GN 1/1:	530 x 325 x 65mm	Ten (10)
HALF-SIZE SHEET PANS:* ON WIRE SHELVES ONLY	18" x 13" x 1"	Ten (10)

120 lb (54 kg) MAXIMUM

VOLUME MAXIMUM: 75 QUARTS (95 LITERS)

*ADDITIONAL WIRE SHELVES REQUIRED FOR MAXIMUM CAPACITY

ELECTRIC COMBITHERM — INSTALLATION MANUAL #7001

ЗипРазбор
vsezip.ru
+7(812)987-08-81

DOOR ASSEMBLY

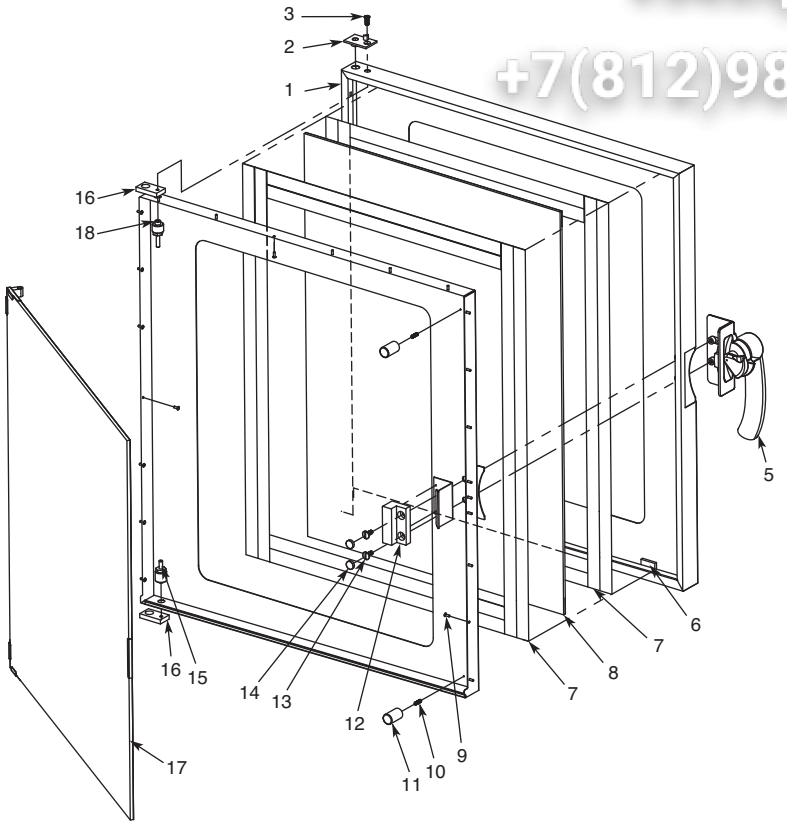

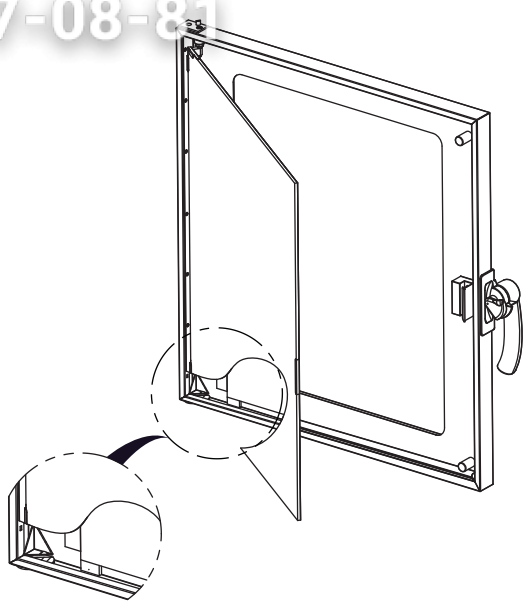

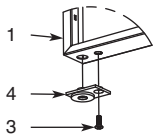

Hinge Detail

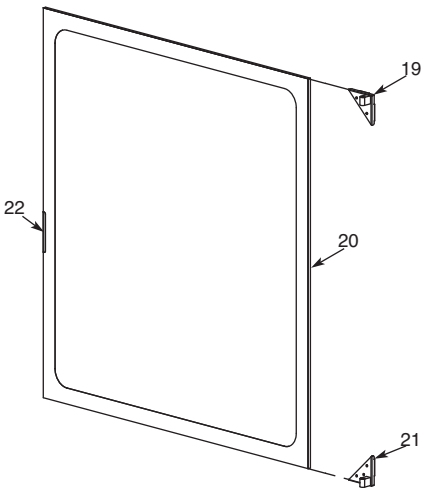

Item	Part	Description	Qty.
1	1006880	Outer Panel, Door 10.10	1
2	HG-25077	Hinge, CT, Top Stop, ML Combi	1
3	SC-22282	Screw, CT, 1.0 x 16 mm, Ph Oval, Hd N/S 18-8, DIN #966A	2
4	HG-25079	Hinge, CT, Upper Ratchet, Combi	1
5	HD-26966	Handle, Door, Right, Combi '06	1
6	BM-27116	Bumper	2
7	TA-25125	Tape, Double Sided	2
8	GL-27224	Glass, Outer Door, 10.10/10.18ep	1
9	RI-27108	Rivet, Sealed	22
10	SC-25091	Screw, CT, M5 x 16, DIN 551, A2 S/S, Sltd Set Screw Flat Pt	2
11	BM-27146	Bumper Stop/Inner Door	2
12	SP-27212	Spacer, Window Latch	1
13	SC-27125	Screw, Truss Head, S/S	2
14	PG-24789	Plug, 15 mm	2
15	PI-26974	Pin, Lower	1
16	HG-25078	Hinge, CT, Anchor, ML Combis	2
17	5005560	Inner Door Glass Assembly	1
18	PI-26973	Pin, Upper	1
19	HG-27217	Lower Hinge Assembly	1
20	GL-27225	Glass, Inner	1
21	HG-27218	Upper Hinge Assembly	1
22	LT-25394	Latch, CT, ML, 7.1 ML	1

ЗиП Общепит
vsezip.ru
+7(812)987-08-81

RECESSED DOOR ASSEMBLY

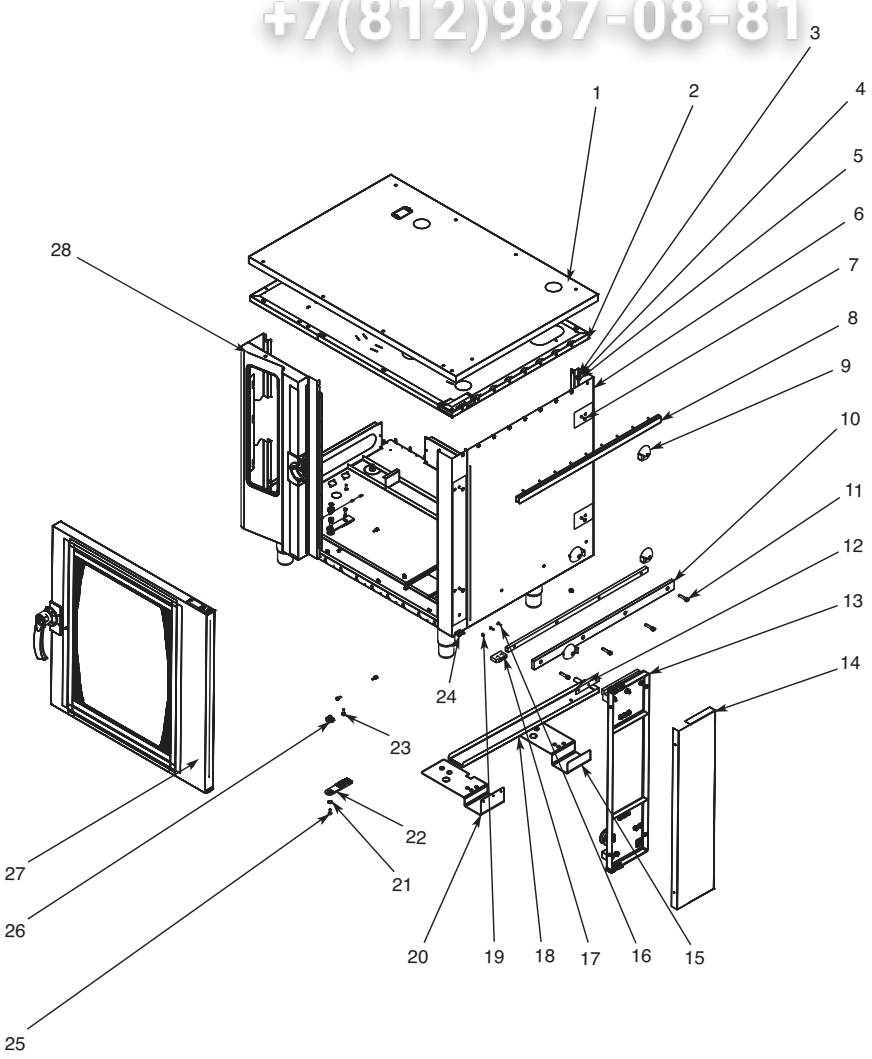

Item	Part	Description	Qty.
1	5008044	Outer Cover Assembly	1
2	5005314	Fill In Cover Assembly	1
3	NU-22291	M6-1.0 x Hex S/S Nut 18-8	26
4	WS-22302	Washer, Lock, M6, DIN 127B	26
5	WS-22297	Washer, Flat, M6, DIN 125	28
6	5008054	Right Side Panel Assembly	1
7	SC-27284	M6 x 30 mm Philips Flat Head Screw	5
8	5008045	Channel Assembly	1
9	BK-27412	Recessed Door Block	4
10	RA-28212	Rail, Bottom	1
11	SC-24388	Screw, SHC M8 x 35 S/S	4
12	BK-22100	White Teflon, Cart Guide Block	1
13	5007898	Trolley Assembly	1
14	1008868	Cover, Trolley	1

Item	Part	Description	Qty.
15	1008505	Rear Bracket, Recessed	1
16	SC-22281	Screw, M5 x 16 Flat Head C Sink	2
17	BK-28252	Block, Guide	1
18	5008048	Drip Pan Assembly	1
19	SC-28262	Screw, M5 x 5 Flat Head C Sink	1
20	1008506	Front Bracket Recessed	1
21	WS-22298	Washer, M8, 18-8	1
22	HG-28040	Hinge	1
23	SC-22924	M6 x 20 Hex Trim HD	2
24	SC-28264	Screw, SHC M5 X 25 S/S	2
25	SC-22284	Screw, M6 x 16 Hex S/S HD	1
26	HG-25101	Hinge, Lower, Ratchet	1
27	5007886	Door Assembly Recessed 10.18	1
28	PE-27614	Front Panel Weld Assembly	1

ЗипОбщепит
vsezip.ru
+7(812)987-08-81

DIRECTIONAL PANEL ASSEMBLY

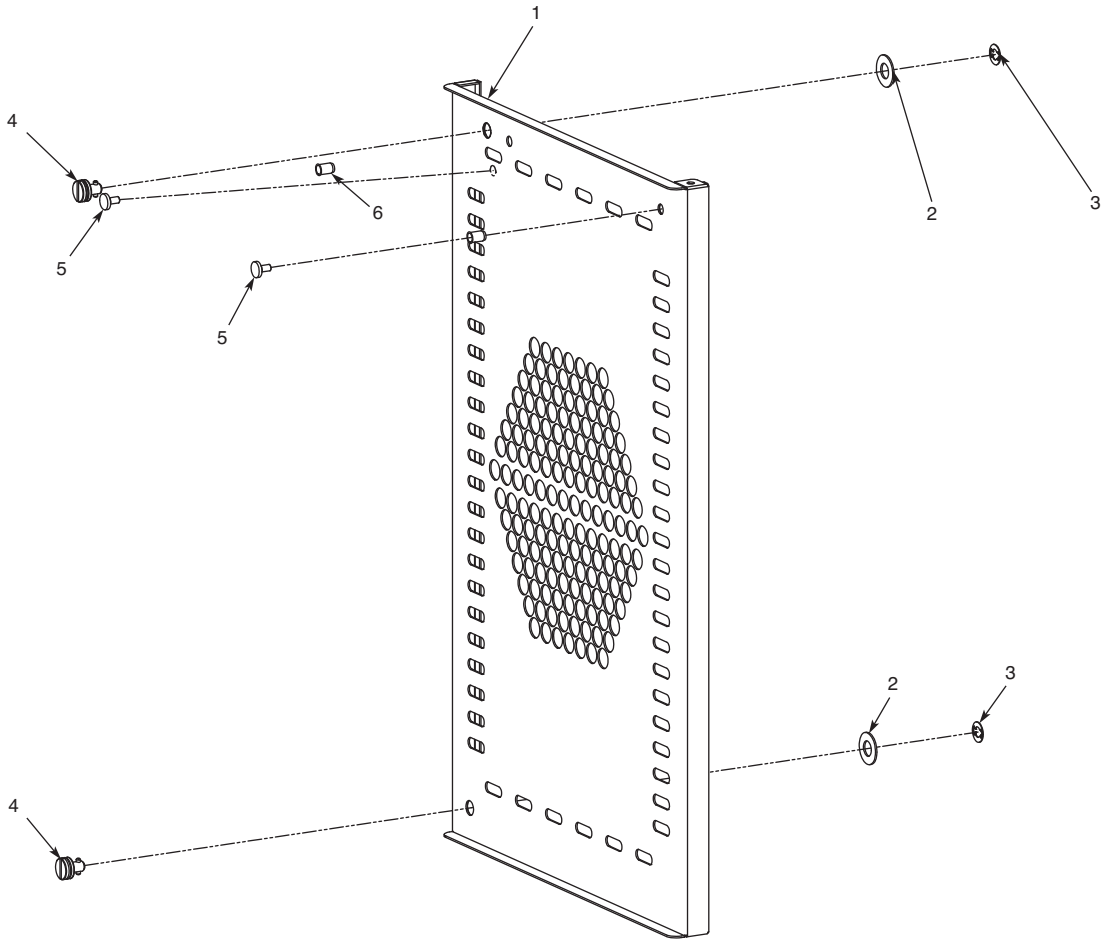

Item	Part	Description	Qty.
1	1005304	Directional Panel, 10.10 Wide	1
2	1006601	Directional Panel Spacer	2
3	WS-24090	Holding (Lock Clip), All Combis ML	2
4	CL-24089	Clip, CT, ML, Lock, W/3 Washers	2
5	SC-22753	Screws, SS Round, Hanging Rack	2
6	NU-22770	Nut, Threaded Insert, M6	2
*	5005542	Fan Panel Assembly	

*Item Not Shown

ЭлитОбщепит
vsezip.ru
+7(812)987-08-81

STEAM GENERATOR ASSEMBLY

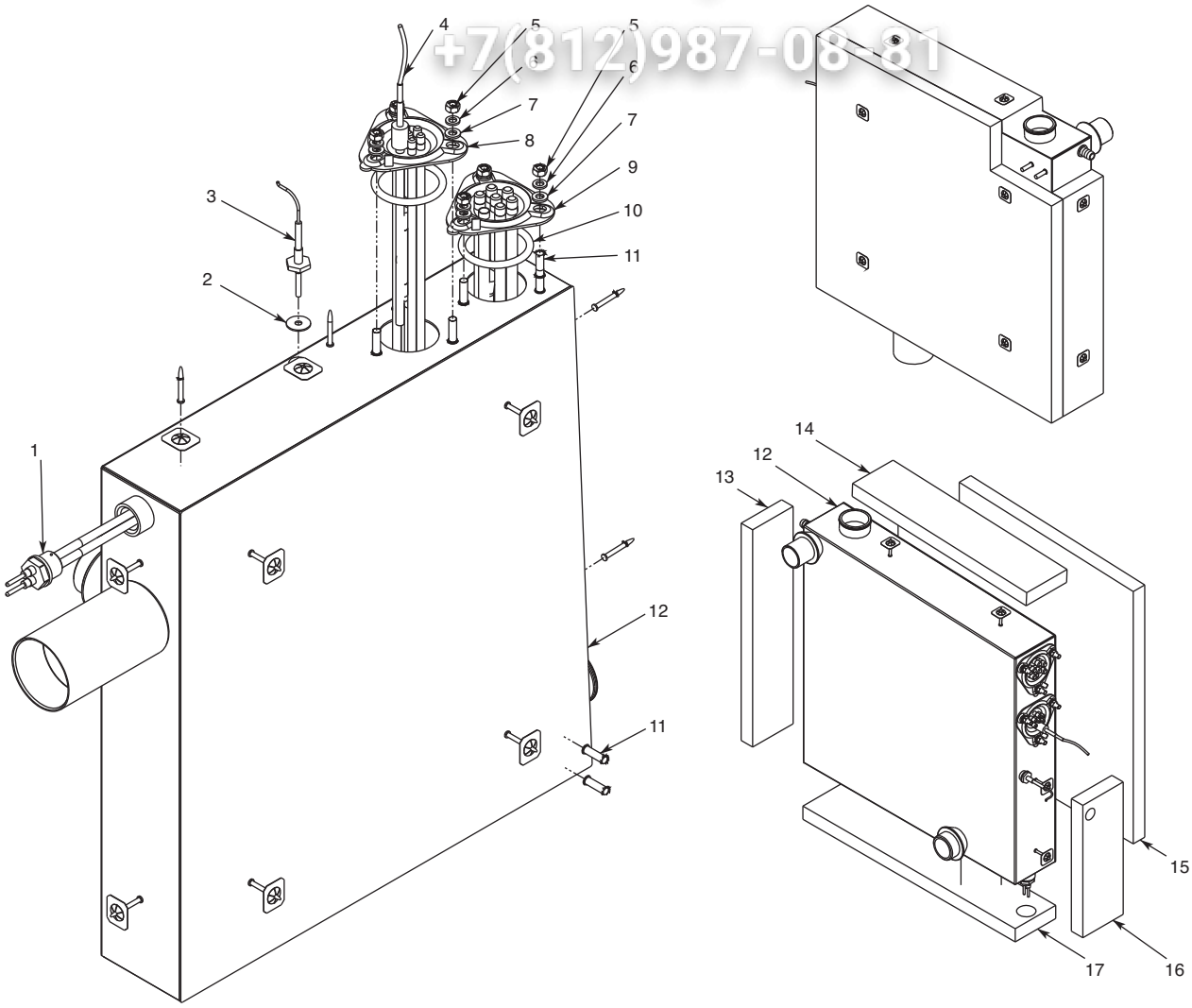

Item	Part	Description	Qty.
1	PR-3706	CT, Water Lev. Lg 3/4" NPT Fitting, 316 S/S Electr.	1
2	SA-25061	CT, T-Couple Probe, ML Combi	1
3	PR-33724	CT, ML Combi, Thermocouple, 1650 mm Wire Length	1
4	PR-33759	CT, ML, Combi, Temperature Sensor	1
5	NU-22291	M6-1.0 x Hex S/S Nut 18-8	6
6	WS-22302	Washer, M6 DIN # 127B	6
7	WS-22297	Washer, Flat, M6 DIN 125	6
8	EL-33412	CT, Heater, ML, Combi Immersion, 6kw, Flanged	1
9	EL-33411	CT, Heater, ML, Combi Immersion, 9kw, Flanged	1
10	SA-23932	O-Ring, 14 mm x 2.5 mm Viton	2
11	ST-22278	Stud M6 x 20 mm	8
12	5004590	Generator Weld	1
13	IN-27239	Insulation, Steam Gen, Heater Side	1
14	IN-27241	Insulation, Steam Gen, Top	1
15	IN-27238	Insulation, Steam Gen, Drip Tube Side	1
16	IN-27240	Insulation, Steam Gen, Bottom	1
17	CL-22259	Insulation Spike Cup	12
*	IN-27237	Insulation, Steam Gen, Back	1

*Item Not Shown

Зип Общепит
vsezip.ru
+7(812)987-08-81

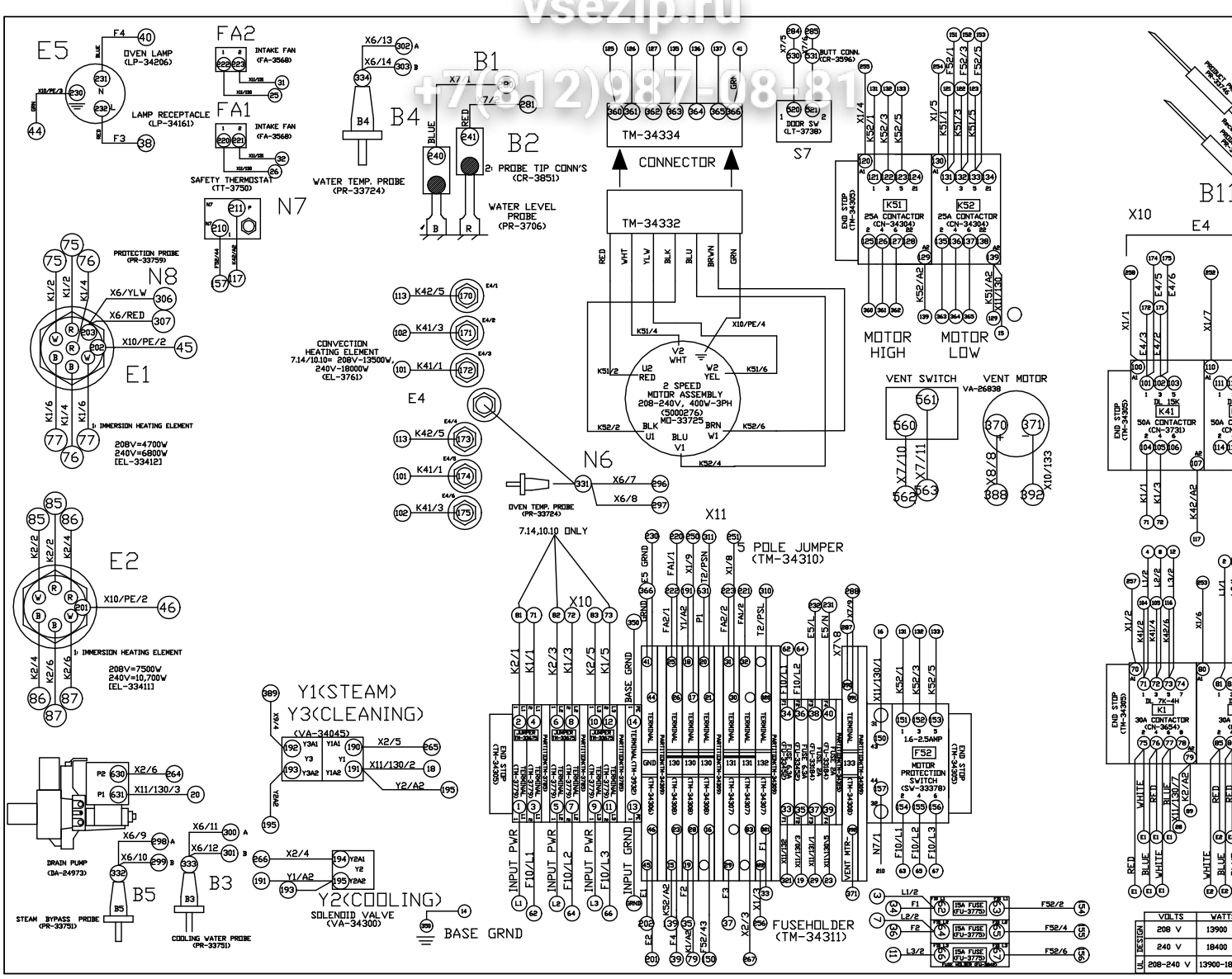

Зип Общепит
vsezip.ru
+7(812)987-08-81

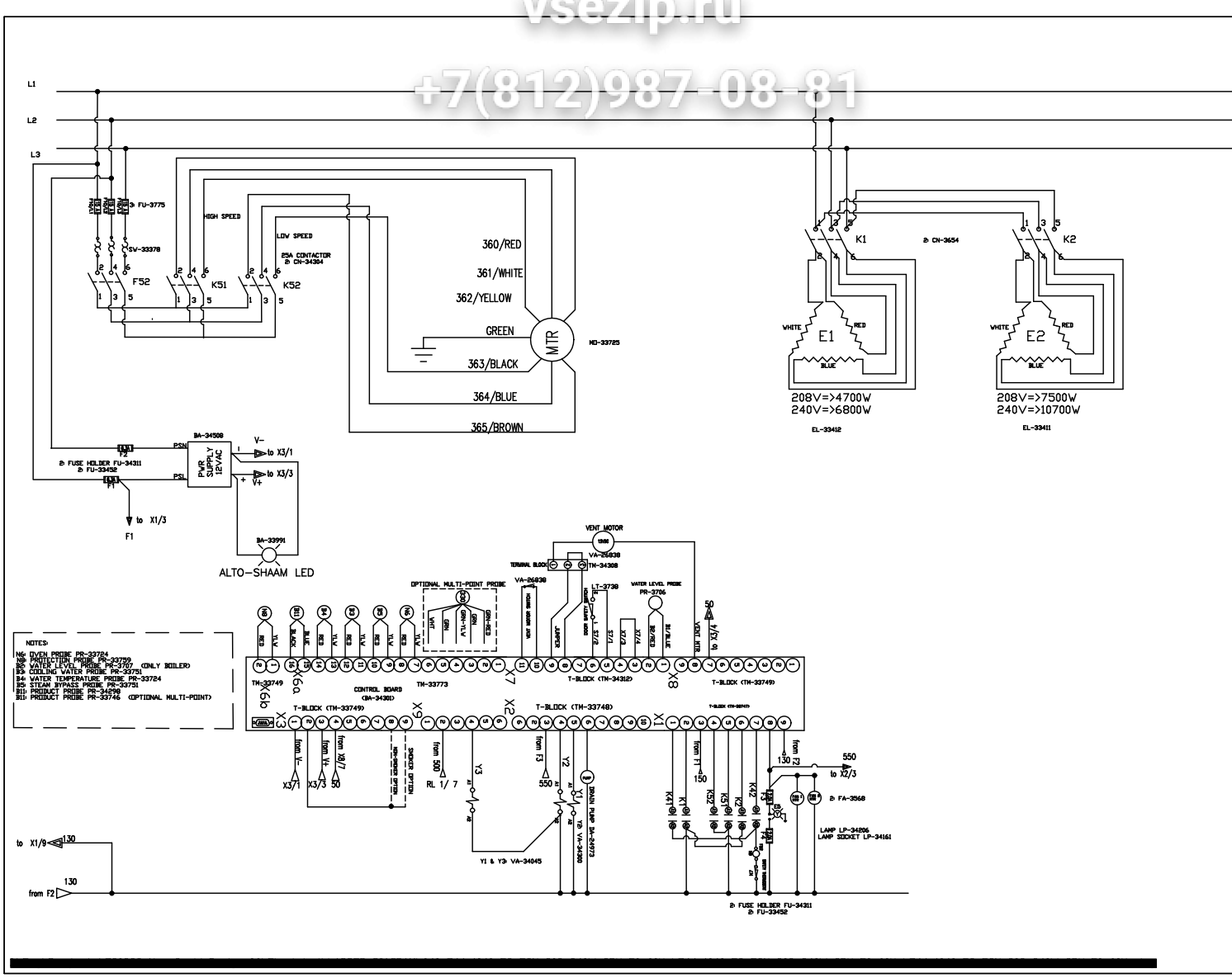

Зип Общепит
vsezip.ru
+7(812)987-08-81

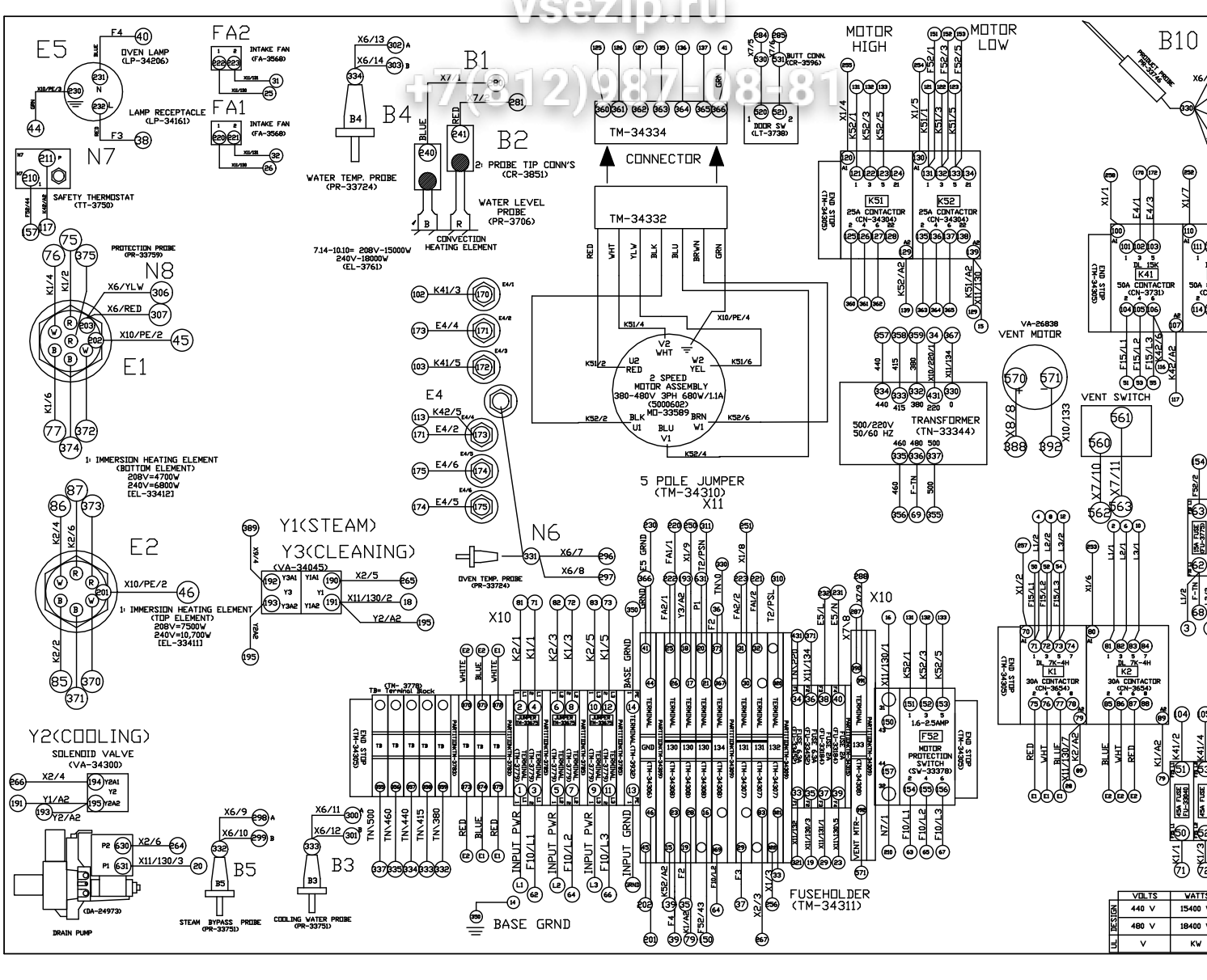

Зип Общепит
vsezip.ru
+7(812)987-08-81

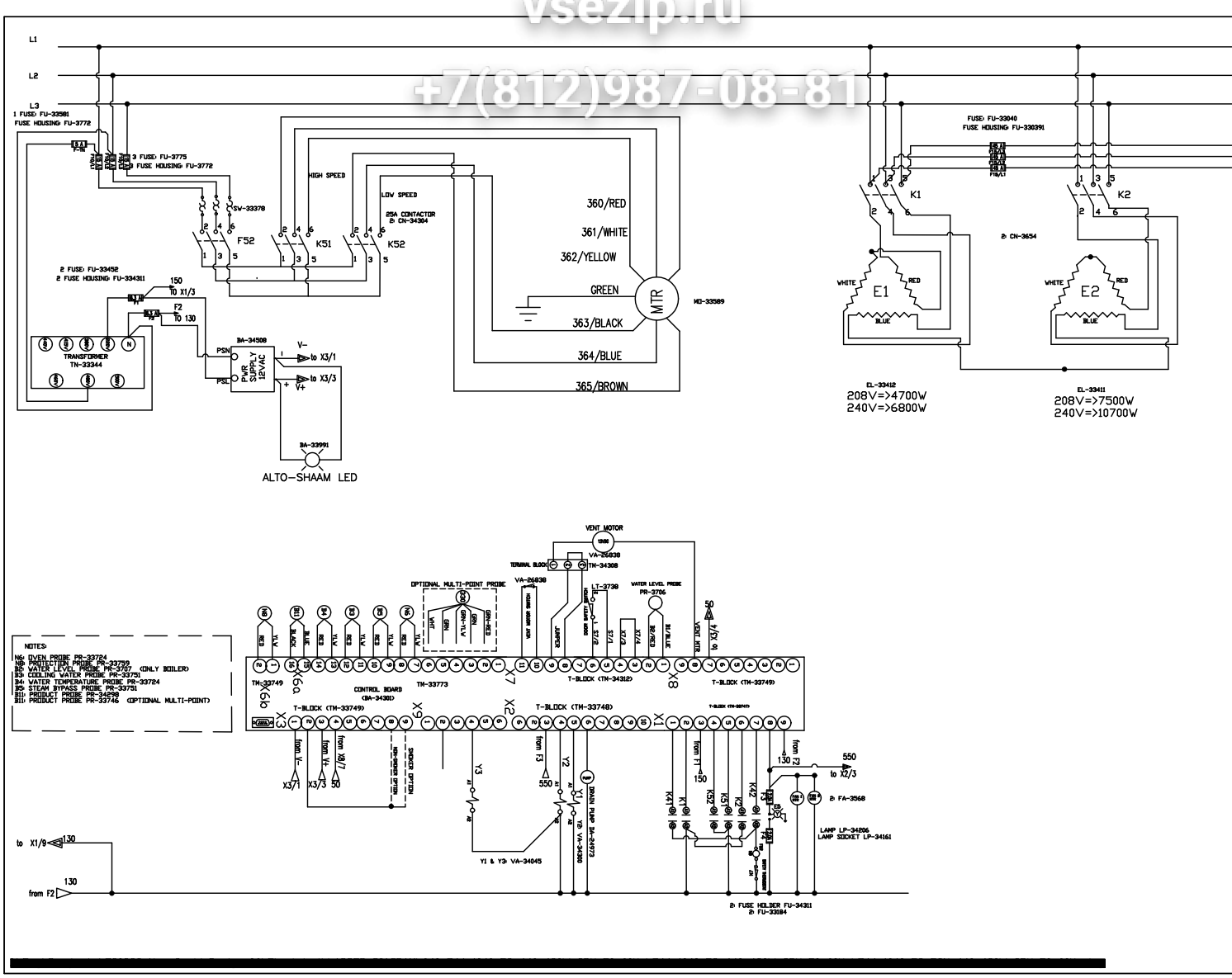

Зип Общепит
vsezip.ru
+7(812)987-08-81

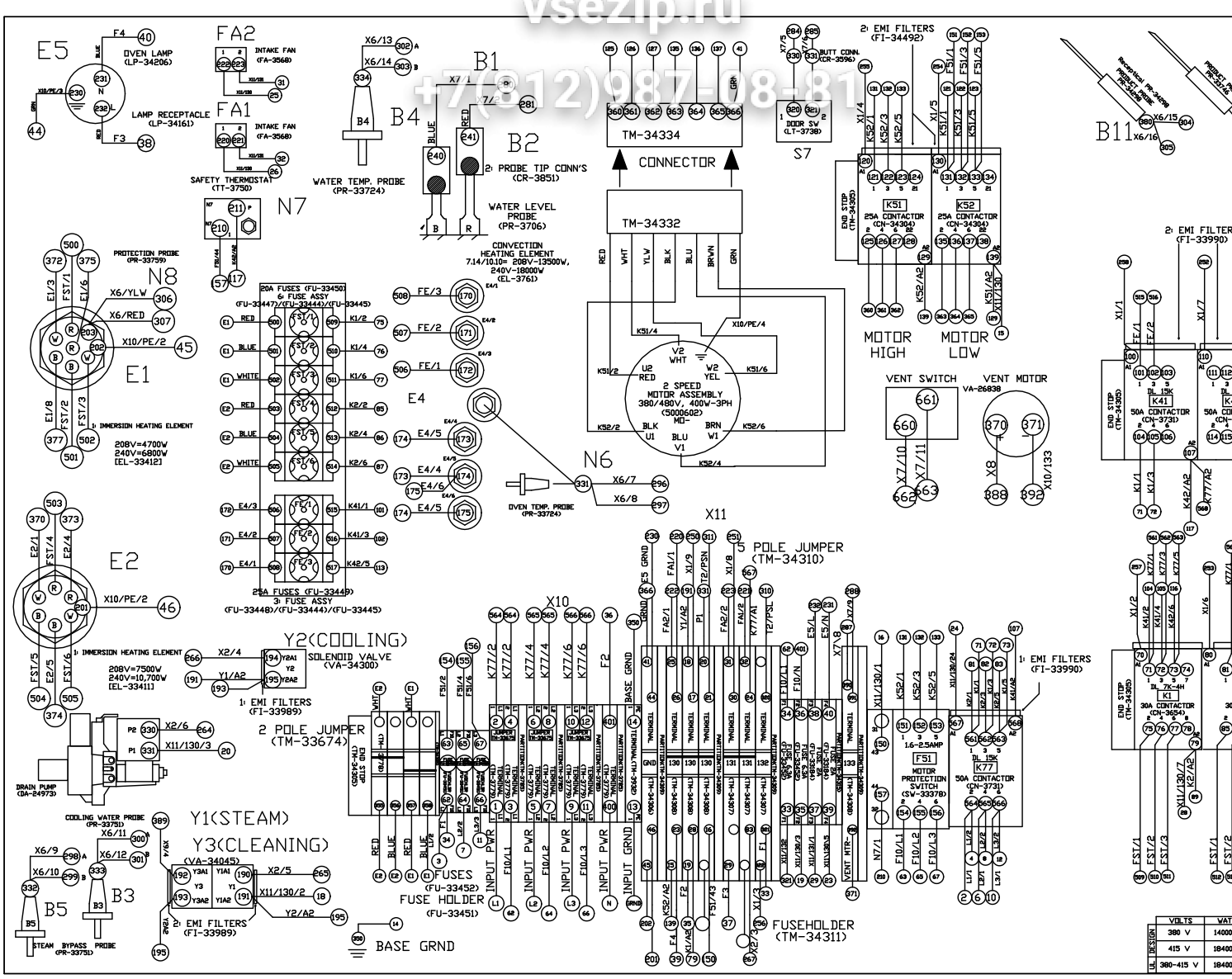

Зип Общепит
vsezip.ru
+7(812)987-08-81

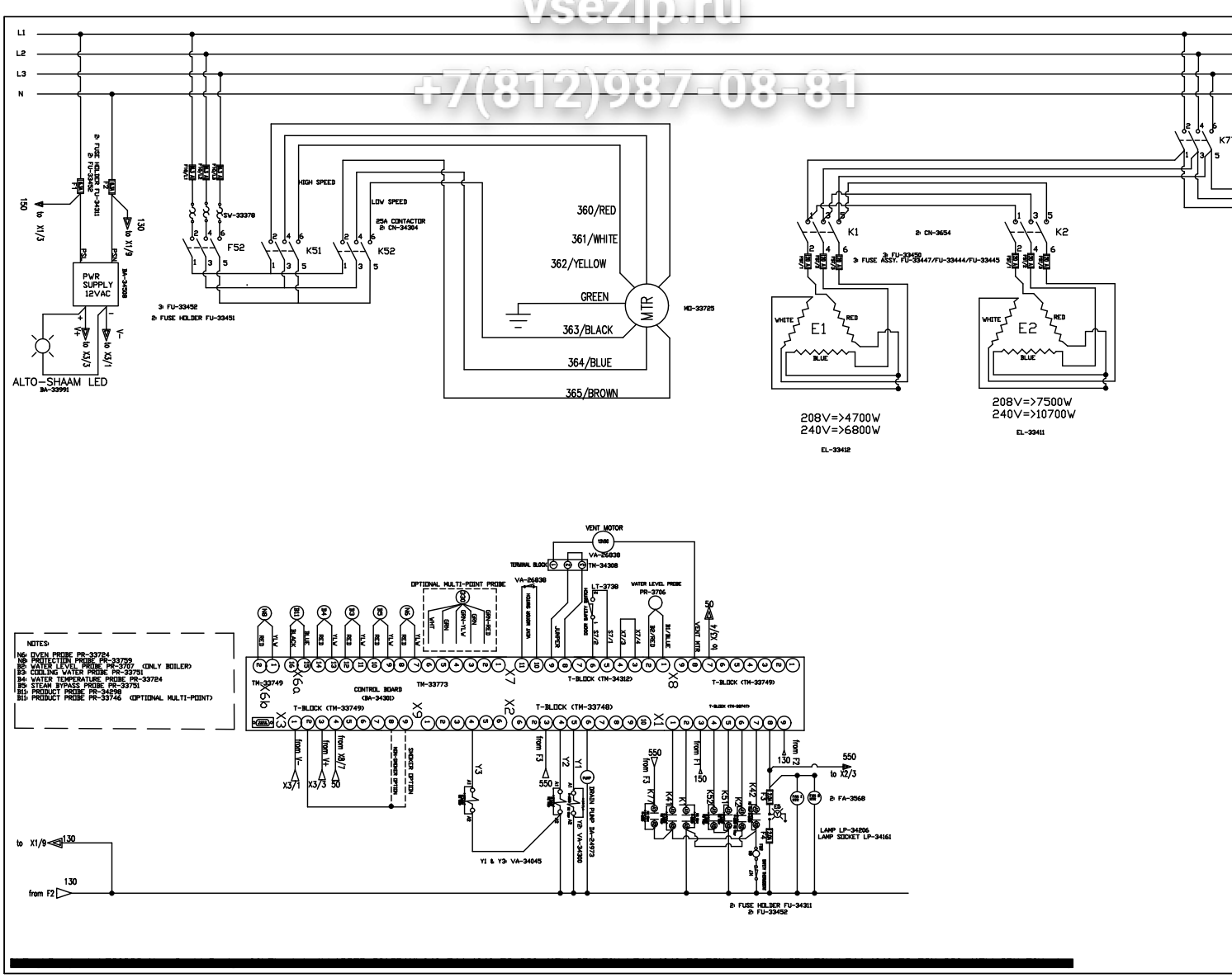

Зип Общепит
vsezip.ru
+7(812)987-08-81

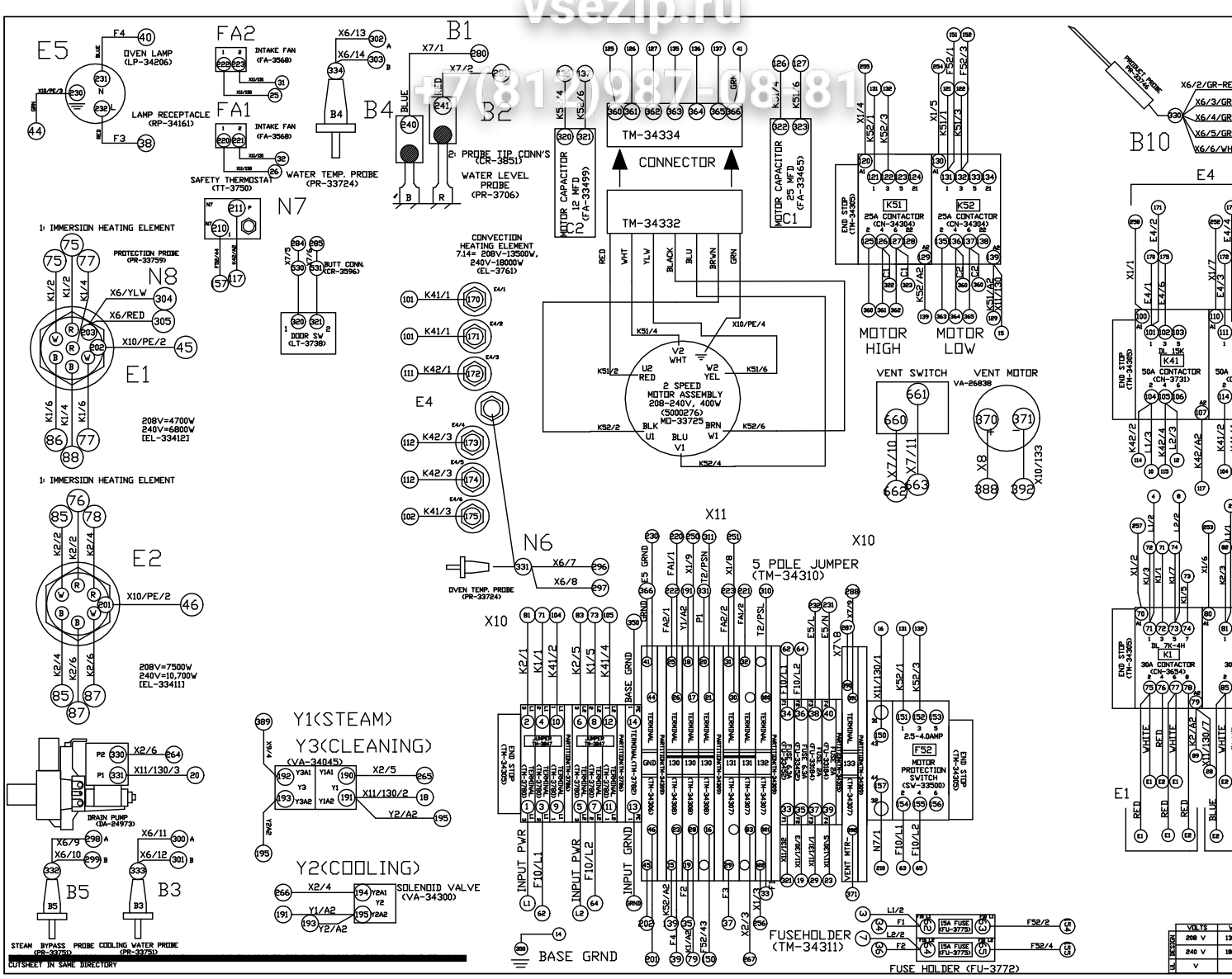

Зип Общепит
vsezip.ru
+7(812)987-08-81

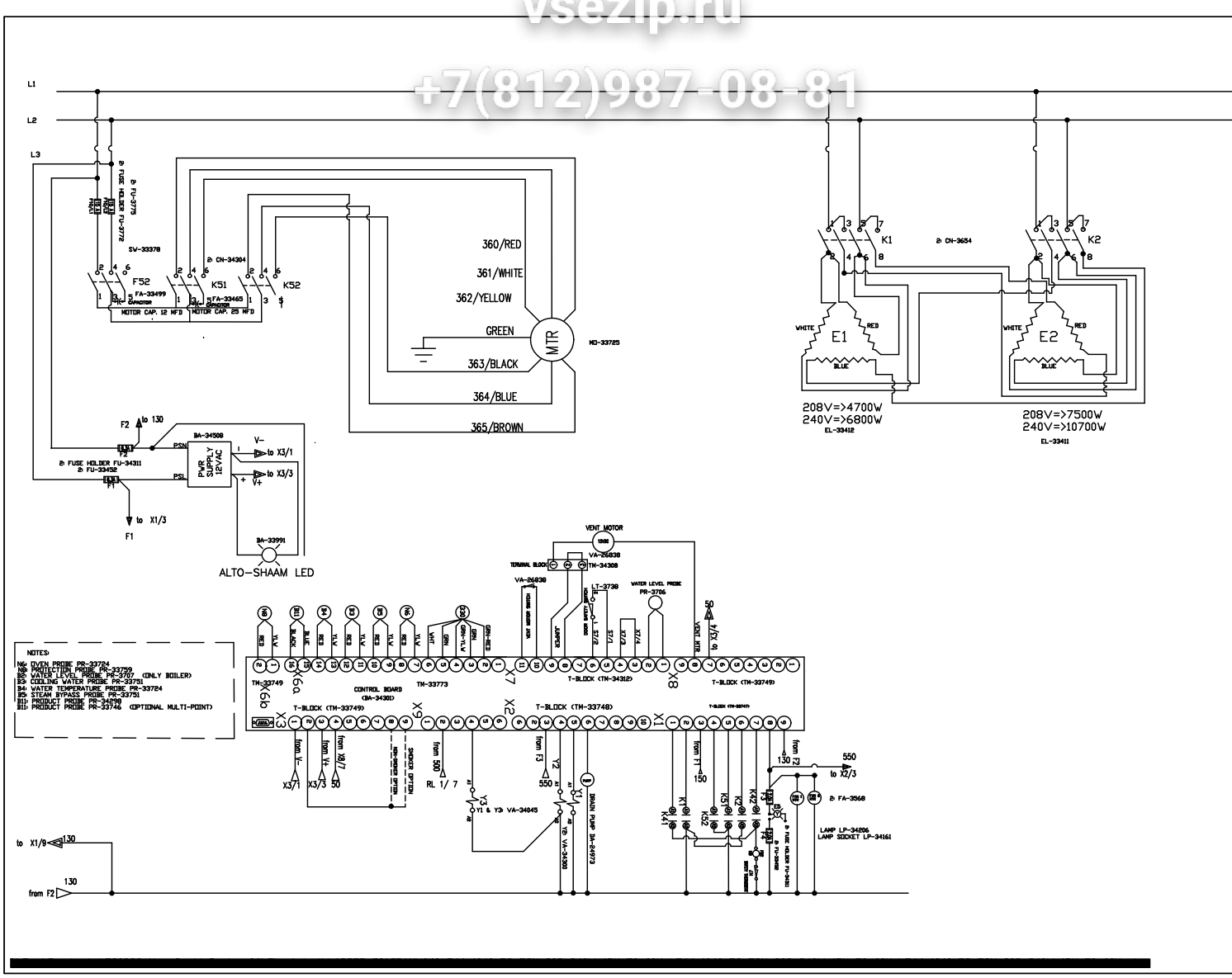

Зип Общепит
vsezip.ru
+7(812)987-08-81

SECTION CONTENTS

Technical Data 160

Parts Information 161
- Door Assembly 161
- Recessed Door Assembly 162
- Directional Panel Assembly 163
- Pressure Box Assembly 164

Wiring and Ladder Diagrams 165
- 208-240V 3PH 50/60 Hz Wiring 165
- 208-240V 3PH 50/60 Hz Ladder 166
- 440-480V 3PH 50/60 Hz Wiring 167
- 440-480V 3PH 50/60 Hz Ladder 168
- 380-415V 3PH 50 Hz Wiring 169
- 380-415V 3PH 50 Hz Ladder 170
- 208-240V 1PH 50/60 Hz Wiring 171
- 208-240V 1PH 50/60 Hz Ladder 172

Return to Main Table of Contents 3

Зип Общепит
vsezip.ru
+7(812)987-08-81

10•10Esi SPECIFICATIONS

ALTO SHAAM COMBITHERM

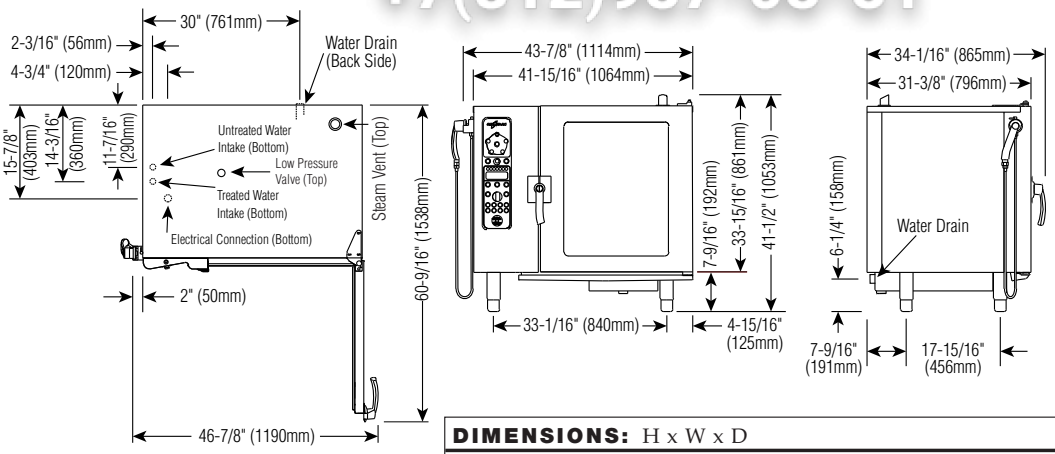

INSTALLATION REQUIREMENTS

Oven must be installed level.
Hood installation is required.
Water supply shut-off valve and back-flow preventer.

DIMENSIONS: H x W x D

EXTERIOR:
41-1/2" x 43-7/8" x 34-1/16" (1053mm x 1114mm x 865mm)

EXTERIOR WITH RETRACTABLE DOOR:
41-1/2" x 47-7/8" x 34-1/16" (1053mm x 1216mm x 865mm)

INTERIOR:
27" x 23-1/2" x 21-1/16" (685mm x 597mm x 535mm)

WATER REQUIREMENTS

TWO (2) COLD WATER INLETS - DRINKING QUALITY

ONE (1) TREATED WATER INLET:	3/4" NPT*	
ONE (1) UNTREATED WATER INLET:	3/4" NPT*	
LINE PRESSURE:	30 to 90 psi	2.8 to 6.2 bar

WATER DRAIN: 1-1/2" CONNECTION WITH AIR GAP

* Can manifold off of one 3/4" line.

CLEARANCE REQUIREMENTS

LEFT: 6" (152mm) PLUS SERVICE ACCESS: 18" (457mm) RECOMMENDED
20" (508mm) FROM HEAT PRODUCING EQUIPMENT

RIGHT: 4" (102mm) TOP: 20" (508mm) FOR AIR MOVEMENT

BACK: 4" (102mm) BOTTOM: 5-1/8" (130mm) FOR LEGS

COUNTER-TOP INSTALLATIONS MUST MAINTAIN 4" (102mm) MINIMUM CLEARANCE FROM COUNTER SURFACE.

WATER QUALITY MINIMUM STANDARDS

USING A WATER SUPPLY NOT MEETING ALTO-SHAAM'S MINIMUM WATER QUALITY STANDARDS WILL VOID THIS WARRANTY. It is the responsibility of the purchaser to ensure that incoming water supply is compliant with the specifications listed through adequate treatment measures. Installation of the CombiGuard™ Water Filtration System is recommended, but this system may not address all water quality issues present.

Contaminant	Inlet Water Requirements (untreated water)
Free Chlorine	Less than 0.1 ppm (mg/L)
Hardness	Less than 3 gpg (52 ppm)
Chloride	Less than 30 ppm (mg/L)
pH	7.0 to 8.5
Alkalinity	Less than 50 ppm (mg/L)
Silica	Less than 12 ppm (mg/L)
Total Dissolved Solids (tds)	Less than 60 ppm

ELECTRICAL

	VOLTAGE	PHASE	CYCLE/HZ	AWG	10•10Esi AMPS	10•10Esi kW	10•10Esi/sk AMPS	10•10Esi/sk kW
208-240	at 208	1*	50/60	2 Wire plus ground	67.0	13.9	69.2	14.4
	at 240			AWG 3	77.0	18.4	79.0	18.9
208-240	at 208	3	50/60	3 Wire plus ground	38.6/ph	13.9	40.0/ph	14.4
	at 240			AWG 6	44.3/ph	18.4	45.5/ph	18.9
380-415	at 380	3	50/60	4 Wire plus ground	21.1/ph	13.9	22.0/ph	14.4
	at 415			AWG 10	25.6/ph	18.4	26.3/ph	18.9
440-480	at 440	3*	50/60	3 Wire plus ground	20.0/ph	15.4	21.0/ph	15.9
	at 480			AWG 8	22.0/ph	18.4	23.0/ph	18.9

* ELECTRICAL SERVICE CHARGE APPLIES

WEIGHT

NET	377 lb	(171 kg)
SHIP	501 lb	(227 kg)
CRATE DIMENSIONS:	49" x 47" x 37" EST.	(1245 x 1194 x 940mm)

CAPACITY

		10•10Esi	10•10Esi/sk
FULL-SIZE PANS:	20" x 12" x 2-1/2"	Ten (10)	Eight (8)
GN 1/1:	530 x 325 x 65mm	Ten (10)	Eight (8)
HALF-SIZE SHEET PANS:* ON WIRE SHELVES ONLY	18" x 13" x 1"	Ten (10)	Nine (9)

120 lb (54 kg) MAXIMUM

VOLUME MAXIMUM: 75 QUARTS (95 LITERS)

*ADDITIONAL WIRE SHELVES REQUIRED FOR MAXIMUM CAPACITY

ЗипРазбор
vsezip.ru
+7(812)987-08-81

DOOR ASSEMBLY

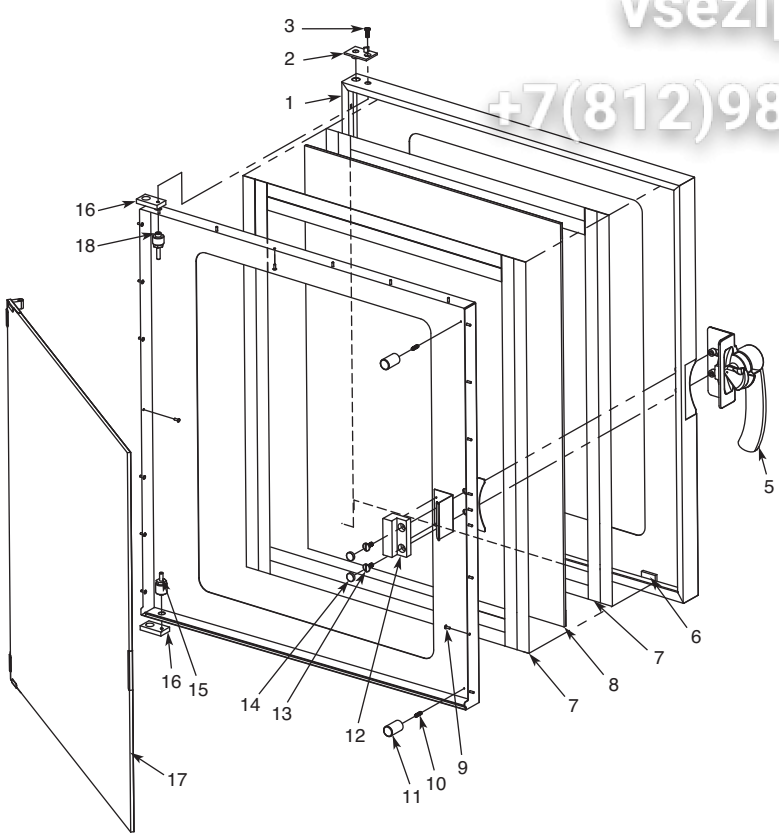

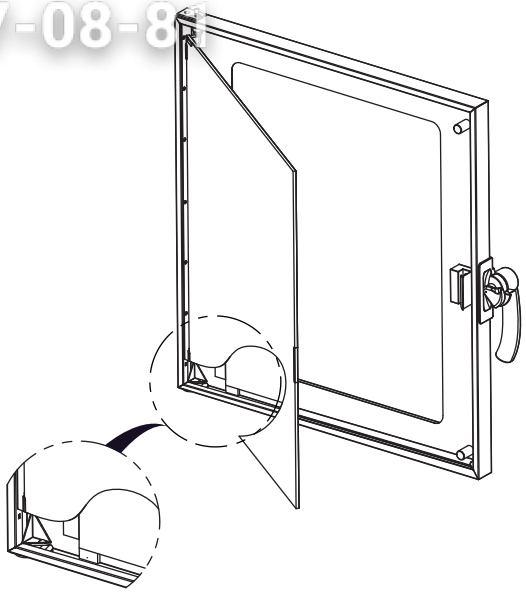

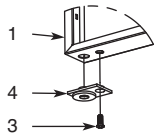

Hinge Detail

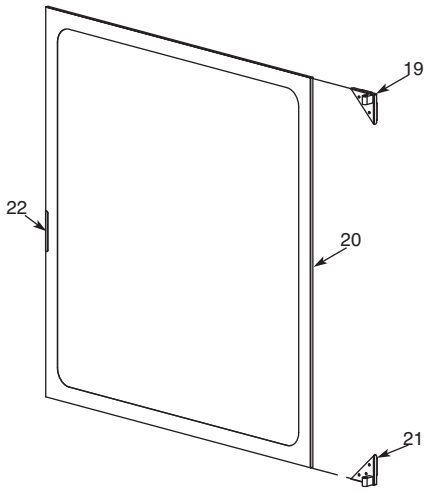

Item	Part	Description	Qty.
1	1006880	Outer Panel, Door 10.10	1
2	HG-25077	Hinge, CT, Top Stop, ML Combi	1
3	SC-22282	Screw, CT, 1.0 x 16 mm, Ph Oval, Hd N/S 18-8, DIN #966A	2
4	HG-25079	Hinge, CT, Upper Ratchet, Combi	1
5	HD-26966	Handle, Door, Right, Combi '06	1
6	BM-27116	Bumper	2
7	TA-25125	Tape, Double Sided	2
8	GL-27224	Glass, Outer Door, 10.10/10.18ep	1
9	RI-27108	Rivet, Sealed	22
10	SC-25091	Screw, CT, M5 x 16, DIN 551, A2 S/S, Sltd Set Screw Flat Pt	2
11	BM-27146	Bumper Stop/Inner Door	2
12	SP-27212	Spacer, Window Latch	1
13	SC-27125	Screw, Truss Head, S/S	2
14	PG-24789	Plug, 15 mm	2
15	PI-26974	Pin, Lower	1
16	HG-25078	Hinge, CT, Anchor, ML Combis	2
17	5005560	Inner Door Glass Assembly	1
18	PI-26973	Pin, Upper	1
19	HG-27217	Lower Hinge Assembly	1
20	GL-27225	Glass, Inner	1
21	HG-27218	Upper Hinge Assembly	1
22	LT-25394	Latch, CT, ML, 7.1 ML	1

ЗиП Общепит
vsezip.ru
+7(812)987-08-81

RECESSED DOOR ASSEMBLY

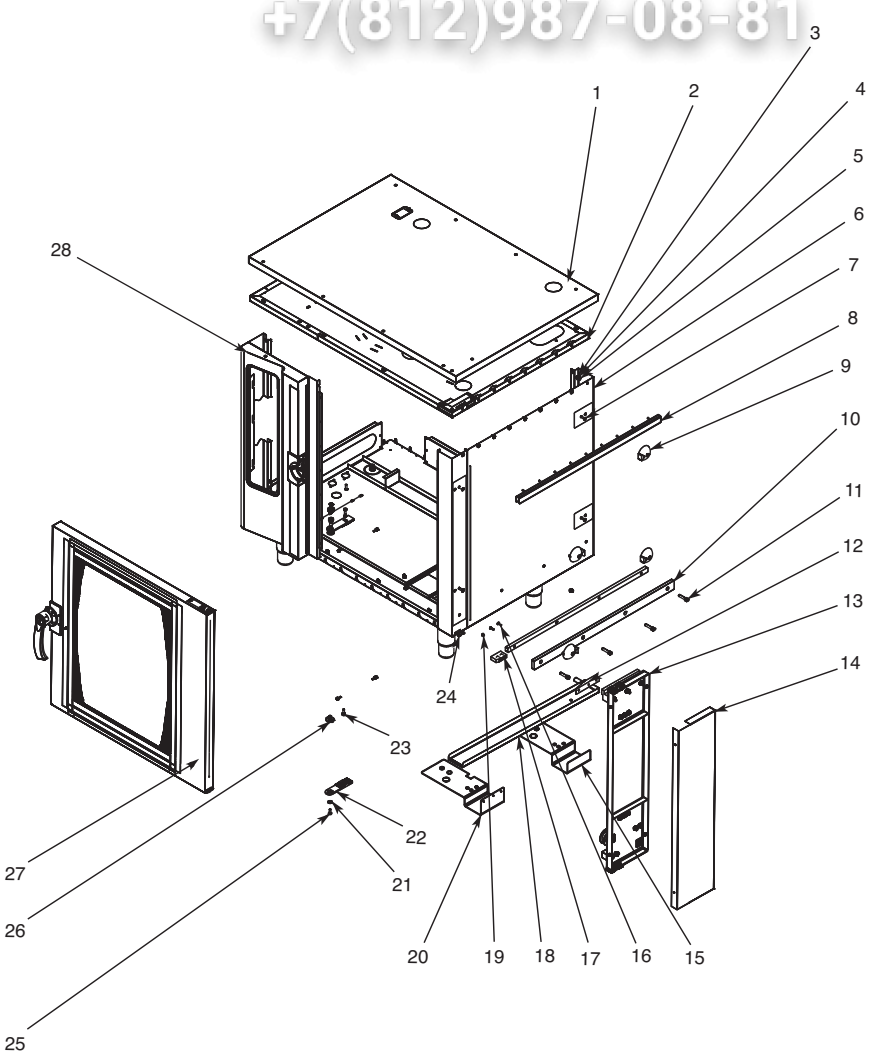

Item	Part	Description	Qty.
1	5008044	Outer Cover Assembly	1
2	5005314	Fill In Cover Assembly	1
3	NU-22291	M6-1.0 x Hex S/S Nut 18-8	26
4	WS-22302	Washer, Lock, M6, DIN 127B	26
5	WS-22297	Washer, Flat, M6, DIN 125	28
6	5008054	Right Side Panel Assembly	1
7	SC-27284	M6 x 30 mm Philips Flat Head Screw	5
8	5008045	Channel Assembly	1
9	BK-27412	Recessed Door Block	4
10	RA-28212	Rail, Bottom	1
11	SC-24388	Screw, SHC M8 x 35 S/S	4
12	BK-22100	White Teflon, Cart Guide Block	1
13	5007898	Trolley Assembly	1
14	1008868	Cover, Trolley	1

Item	Part	Description	Qty.
15	1008505	Rear Bracket, Recessed	1
16	SC-22281	Screw, M5 x 16 Flat Head C Sink	2
17	BK-28252	Block, Guide	1
18	5008048	Drip Pan Assembly	1
19	SC-28262	Screw, M5 x 5 Flat Head C Sink	1
20	1008506	Front Bracket Recessed	1
21	WS-22298	Washer, M8, 18-8	1
22	HG-28040	Hinge	1
23	SC-22924	M6 x 20 Hex Trim HD	2
24	SC-28264	Screw, SHC M5 X 25 S/S	2
25	SC-22284	Screw, M6 x 16 Hex S/S HD	1
26	HG-25101	Hinge, Lower, Ratchet	1
27	5007886	Door Assembly Recessed 10.18	1
28	PE-27614	Front Panel Weld Assembly	1

ЗипОбщепит
vsezip.ru
+7(812)987-08-81

DIRECTIONAL PANEL ASSEMBLY

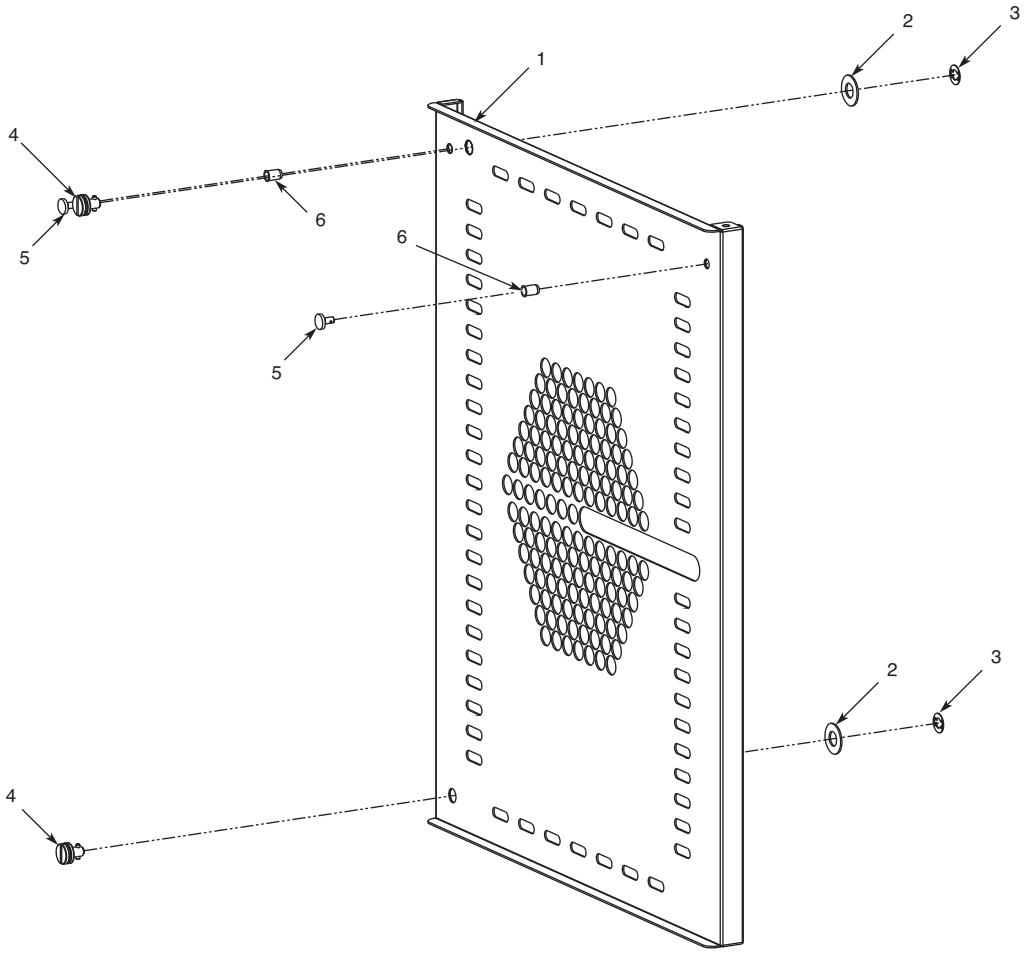

Item	Part	Description	Qty.
1	1005309	Directional Panel	1
2	1006601	Directional Panel Spacer	2
3	WS-24090	Holding (Lock Clip)	2
4	CL-24089	Clip, CT, ML, Lock, W/3 Washers	2
5	SC-22753	Screws, SS Round, Hanging Rack	2
6	NU-22770	Nut, Threaded Insert, M6	2

ЭлитОбщепит
vsezip.ru
+7(812)987-08-81

PRESSURE BOX ASSEMBLY

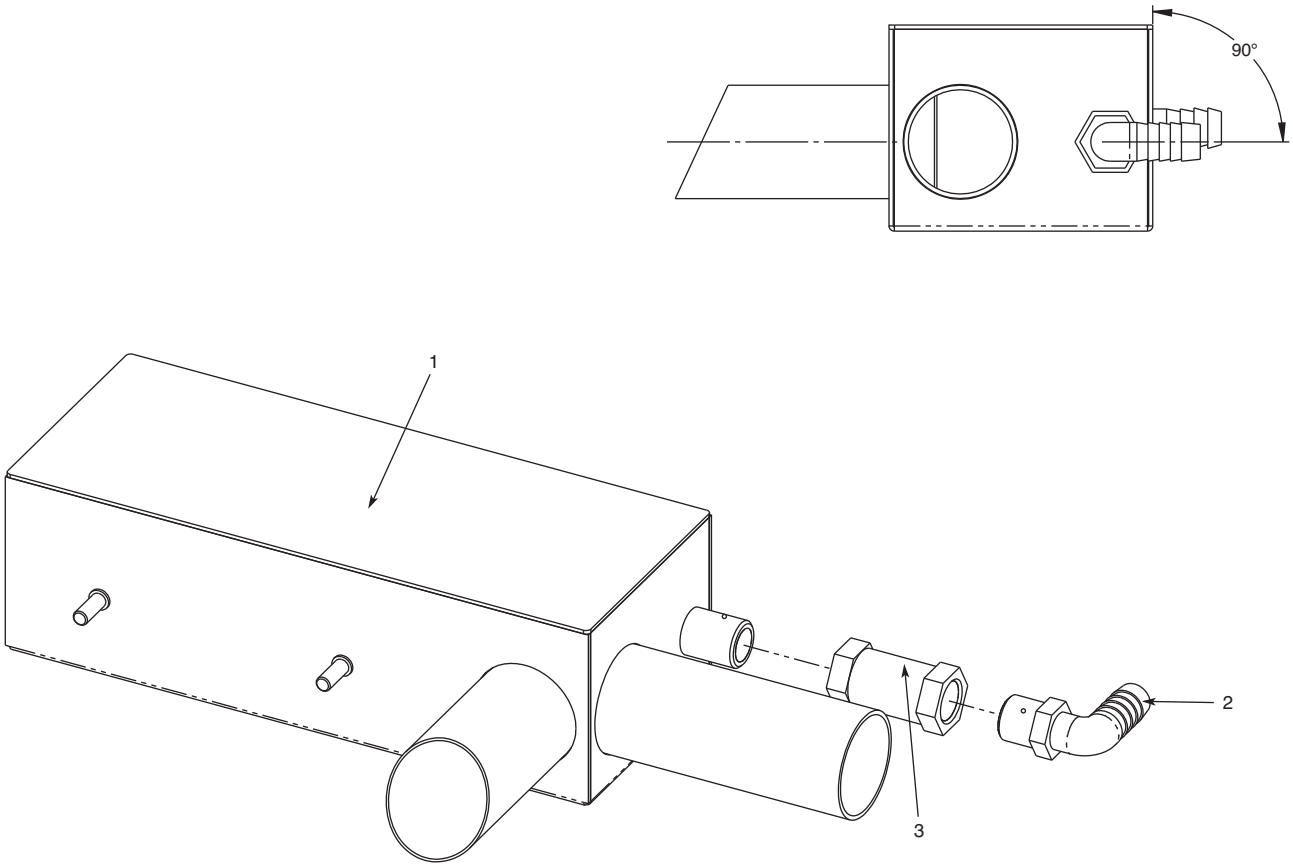

Item	Part	Description	Qty.
1	5005009	Pressure Box	1
2	EB-25551	Elbow, Nylon, 1/2" x 3/8"	1
3	VA-25549	Valve, 3/8", Flow Control, 0.12 GPM	1

Зип Общепит
vsezip.ru
+7(812)987-08-81

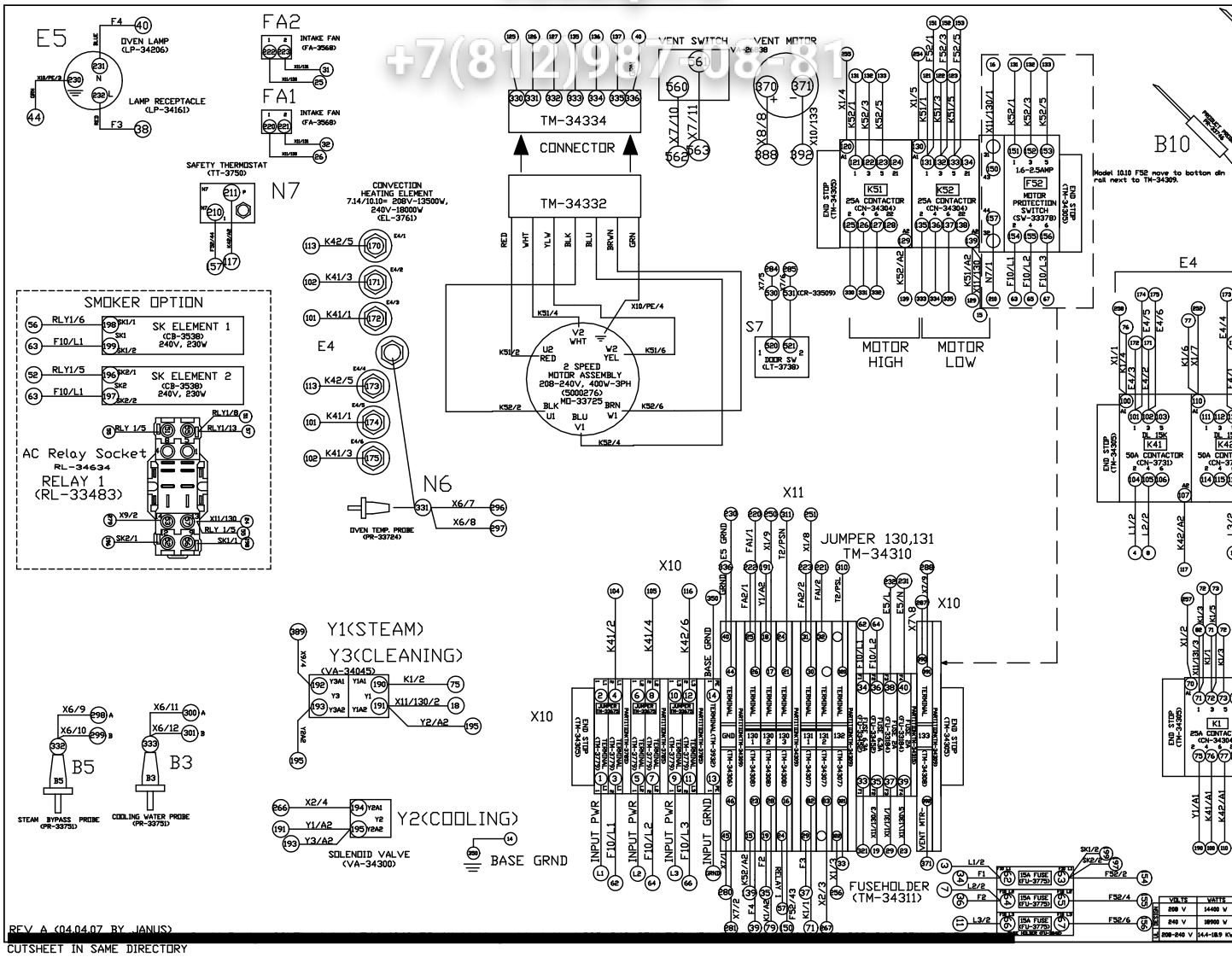

REV A (04.04.07 BY JANUS)
CUTSHEET IN SAME DIRECTORY

Зип Общепит
vsezip.ru
+7(812)987-08-81

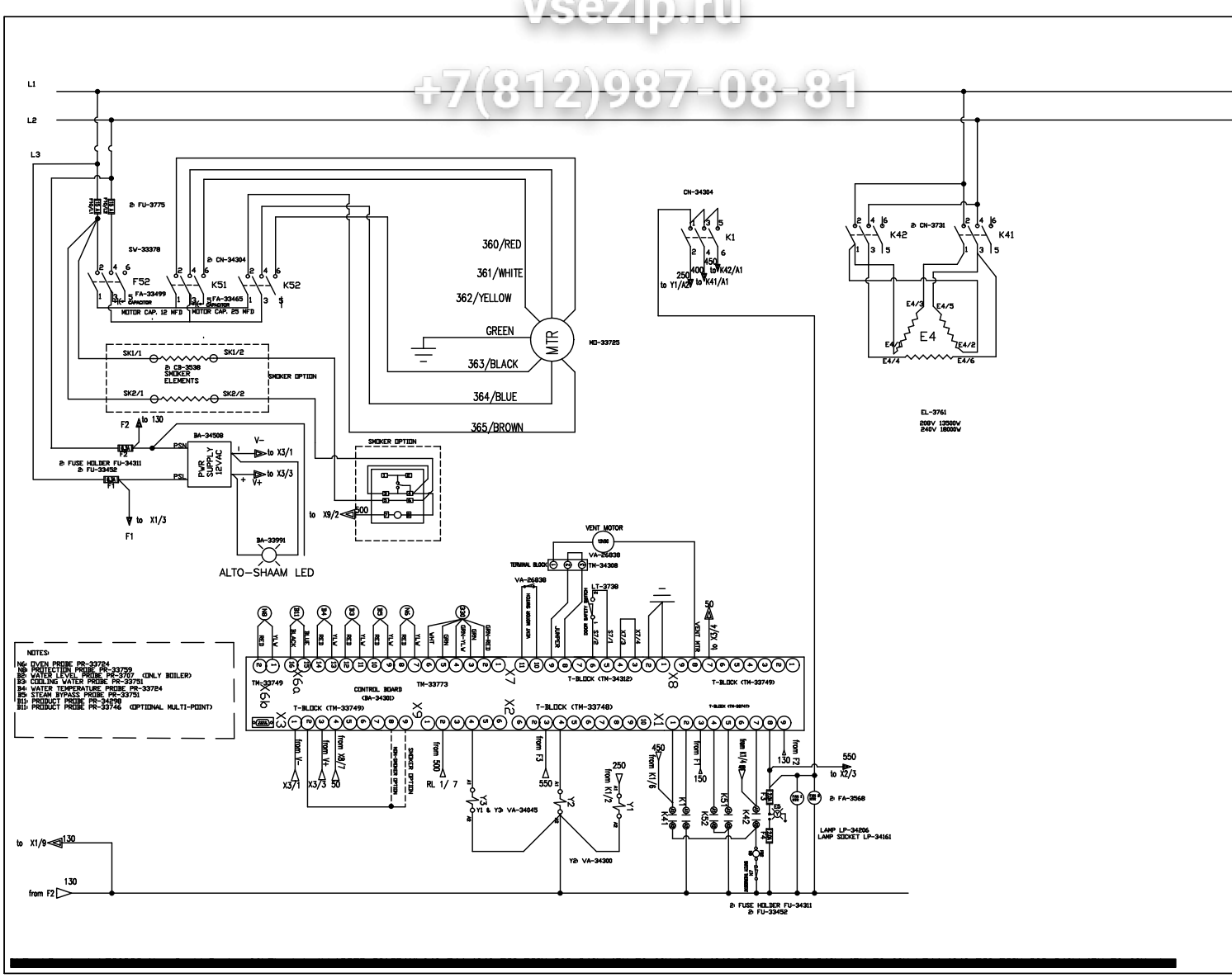

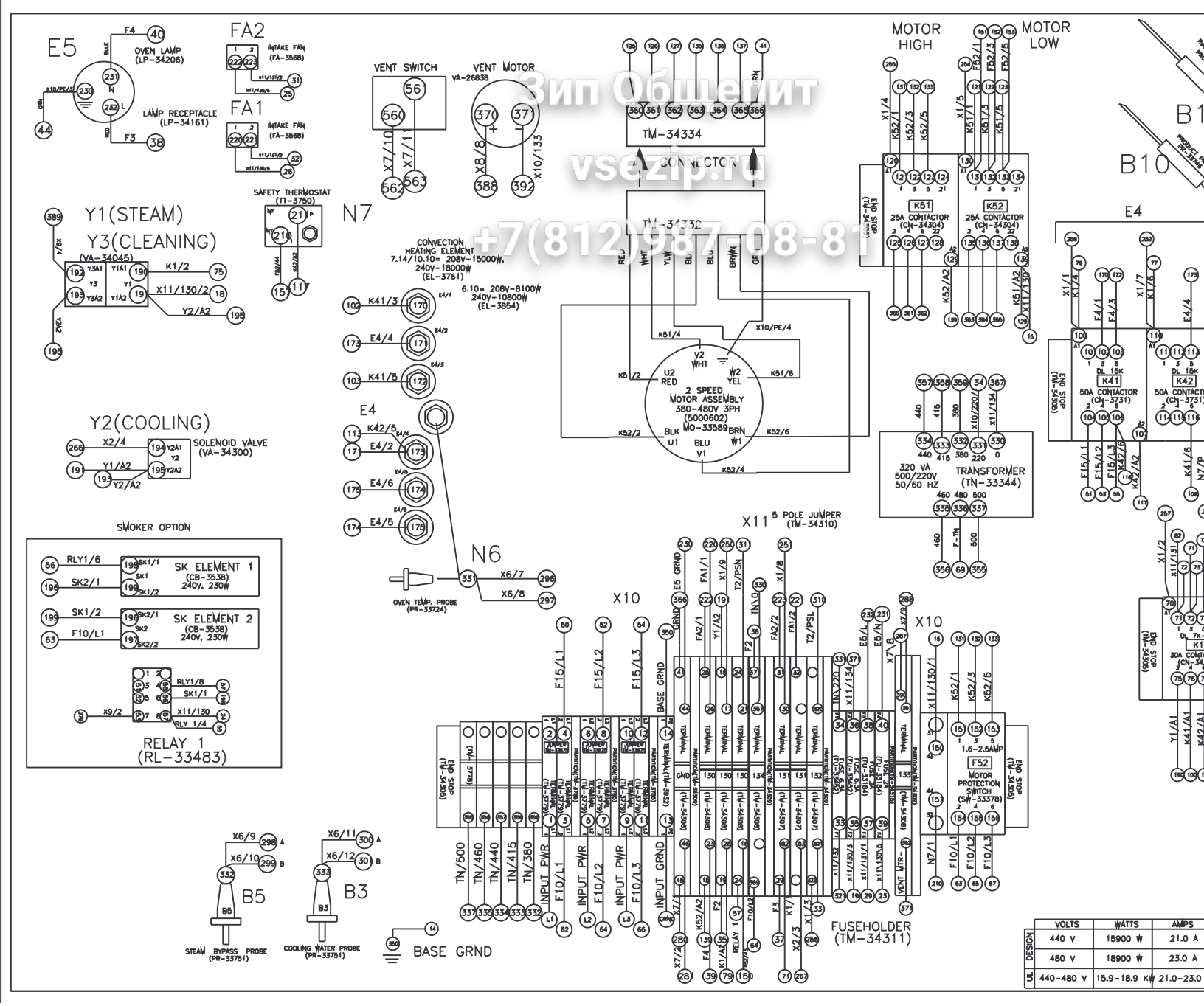

DESIGN	VOLTS	WATTS	AMPS
UL	440 V	15900 W	21.0 A
	480 V	18900 W	23.0 A
	440-480 V	15.9-18.9 KW	21.0-23.0

Зип Общепит
vsezip.ru
+7(812)987-08-81

Зип Общепит
vsezip.ru
+7(812)987-08-81

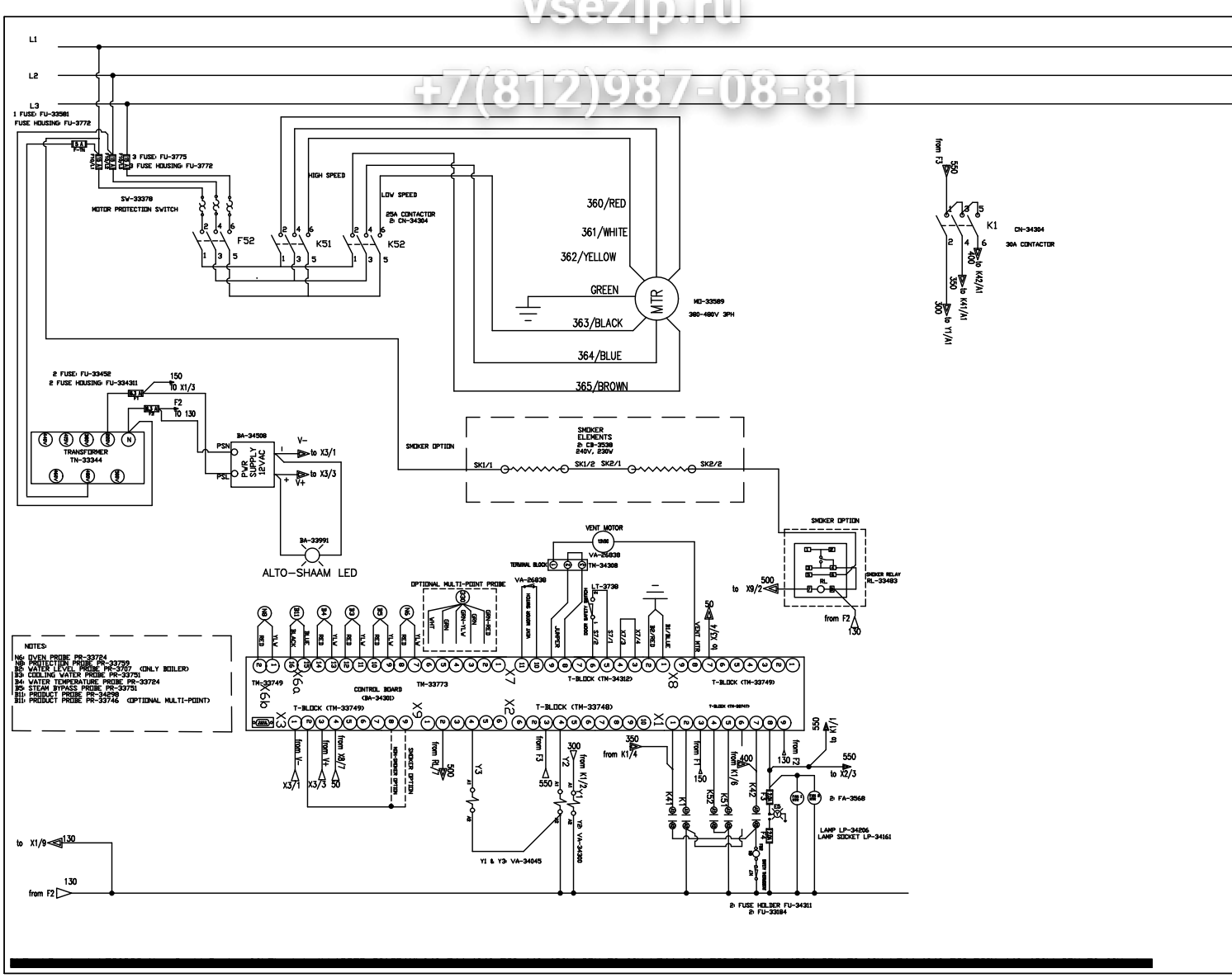

Зип Общепит
vsezip.ru
+7(812)987-08-81

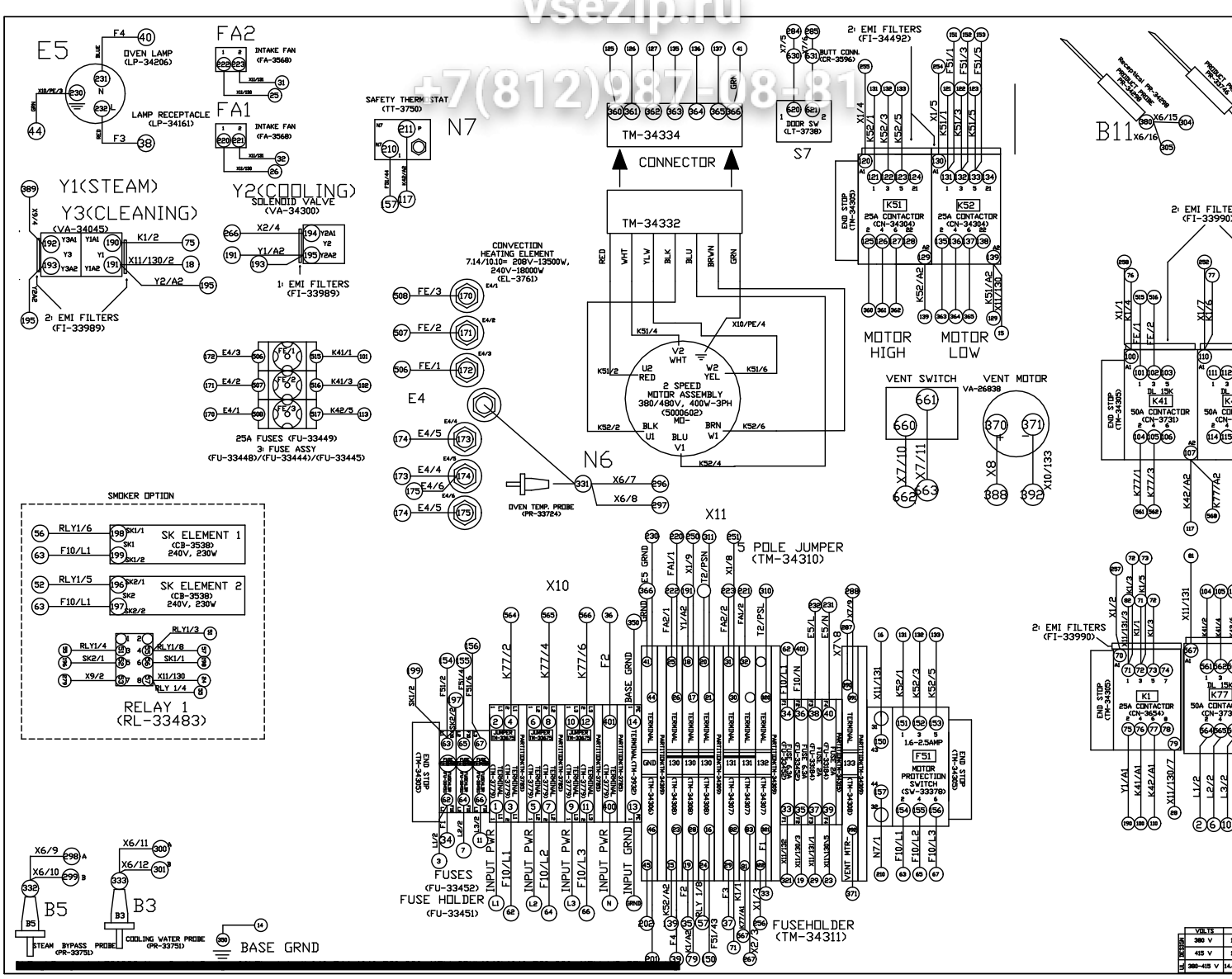

Зип Общепит
vsezip.ru
+7(812)987-08-81

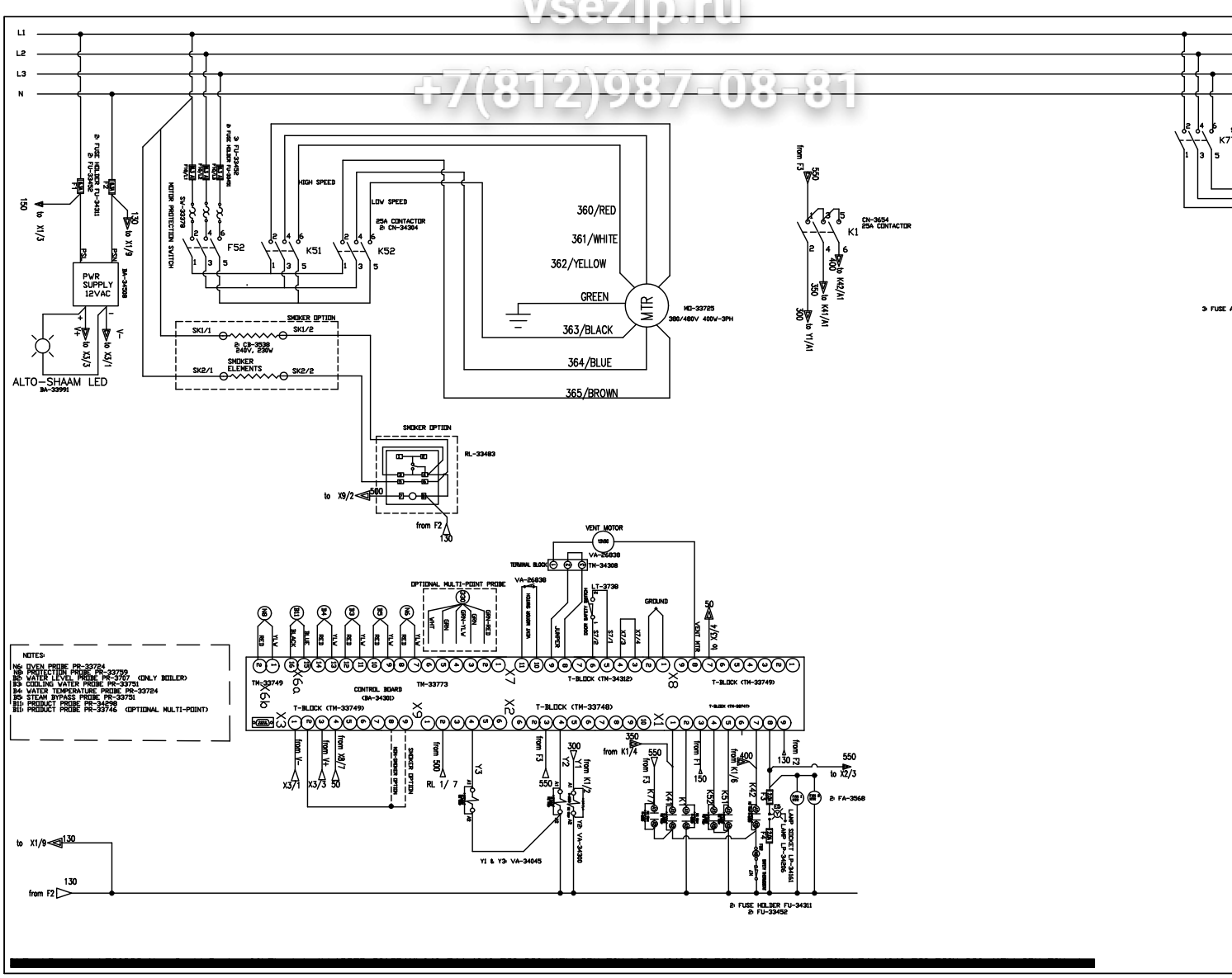

Зип Общепит
vsezip.ru
+7(812)987-08-81

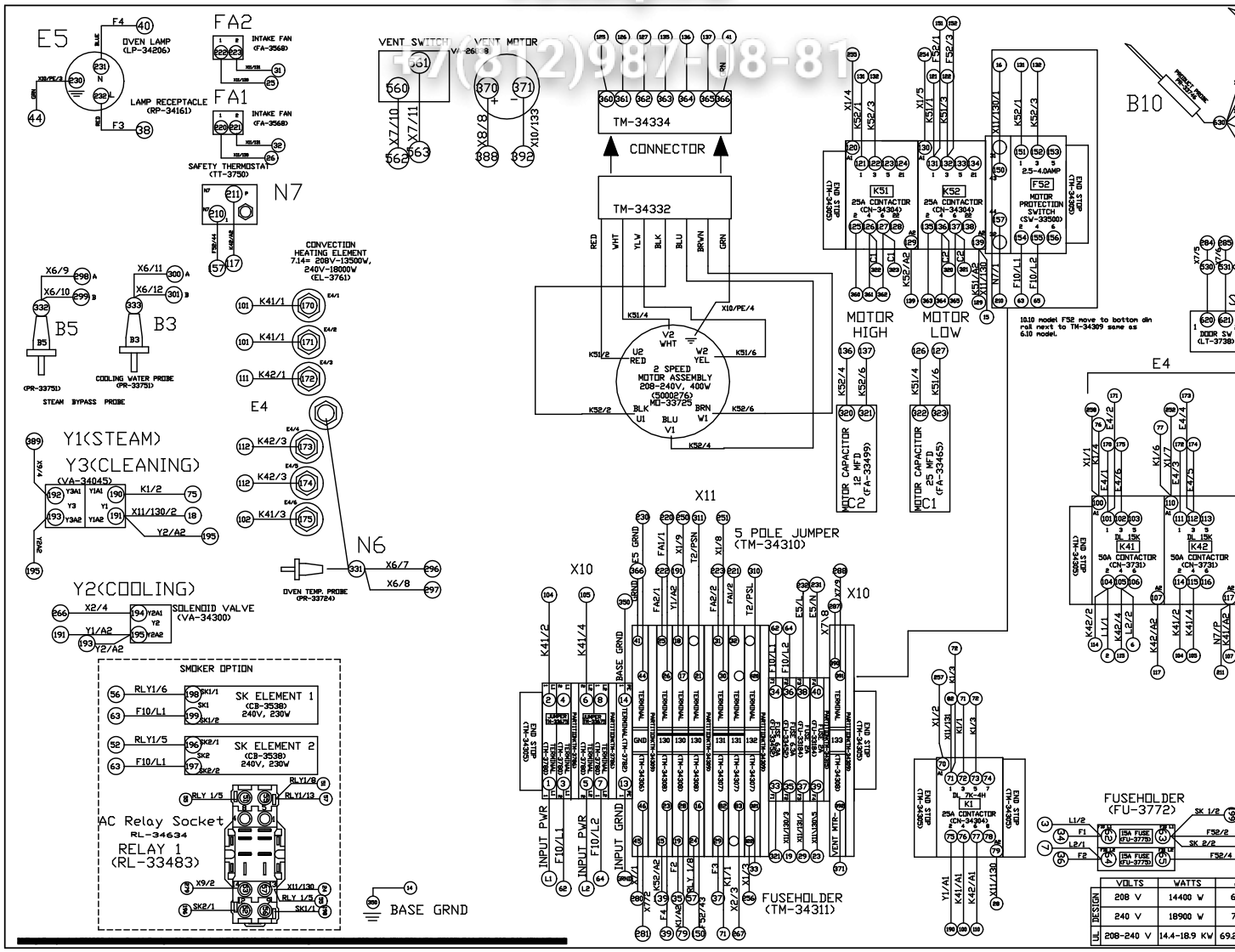

Зип Общепит
vsezip.ru
+7(812)987-08-81

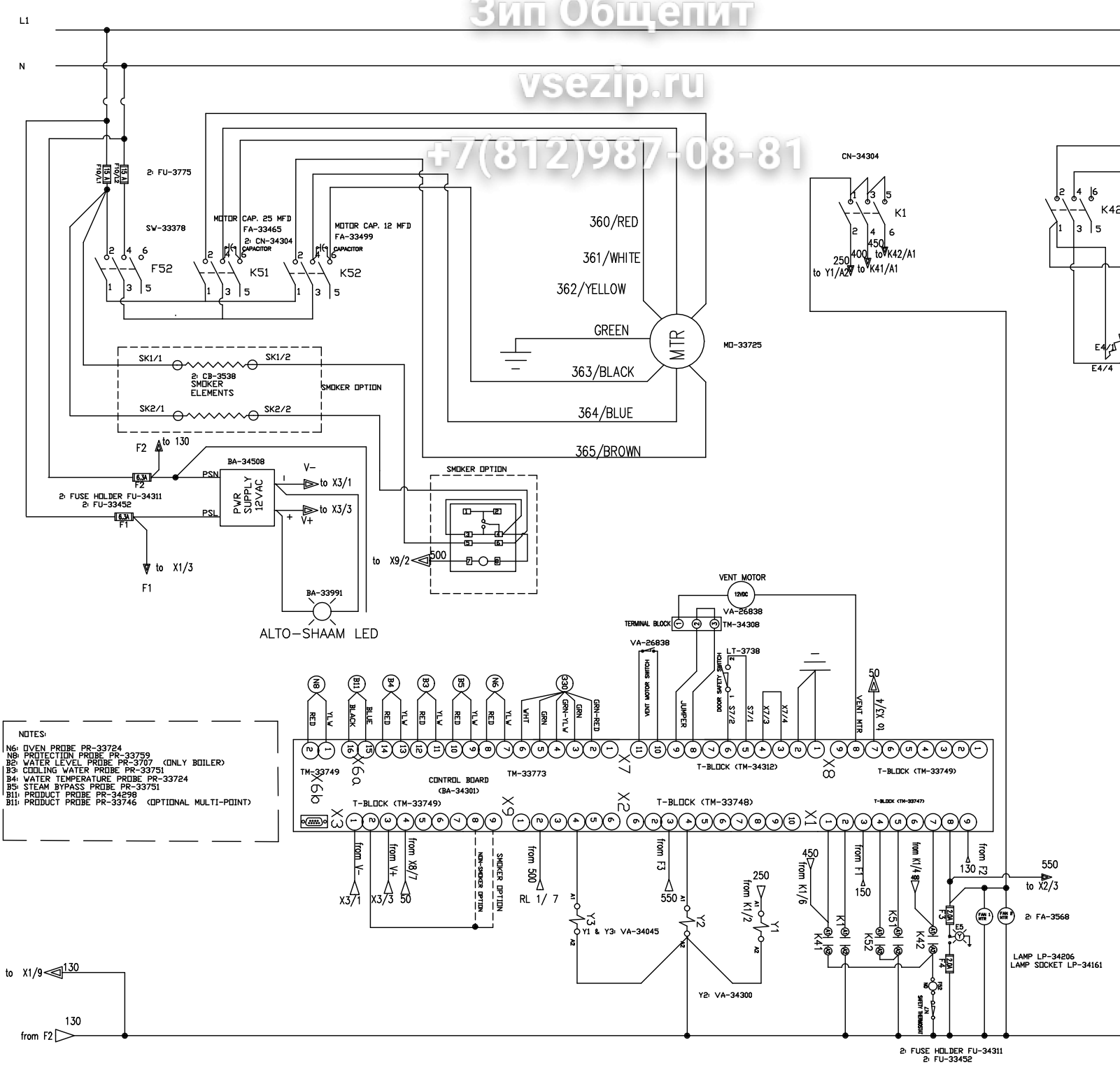

NOTES:
N6: OVEN PROBE PR-33724
N8: PROTECTION PROBE PR-33759
B2: WATER LEVEL PROBE PR-3707 (ONLY BOILER)
B3: COOLING WATER PROBE PR-33751
B4: WATER TEMPERATURE PROBE PR-33724
B5: STEAM BYPASS PROBE PR-33751
B11: PRODUCT PROBE PR-34298
B11: PRODUCT PROBE PR-33746 (OPTIONAL MULTI-POINT)

Зип Общепит
vsezip.ru
+7(812)987-08-81

SECTION CONTENTS

Technical Data 174

Parts Information 175
- Door Assembly 175
- Recessed Door Assembly 176
- Directional Panel Assembly 177
- Pressure Box Assembly 178

Wiring and Ladder Diagrams 179
- 208-240V 3PH 50/60 Hz Wiring 179
- 208-240V 3PH 50/60 Hz Ladder 180
- 440-480V 3PH 50/60 Hz Wiring 181
- 440-480V 3PH 50/60 Hz Ladder 182
- 380-415V 3PH 50 Hz Wiring 183
- 380-415V 3PH 50 Hz Ladder 184
- 208-240V 1PH 50/60 Hz Wiring 185
- 208-240V 1PH 50/60 Hz Ladder 186

Return to Main Table of Contents 3

Зип Общепит
vsezip.ru
+7(812)987-08-81

ALTO SHAAM COMBITHERM

10•10 ESiN SPECIFICATIONS

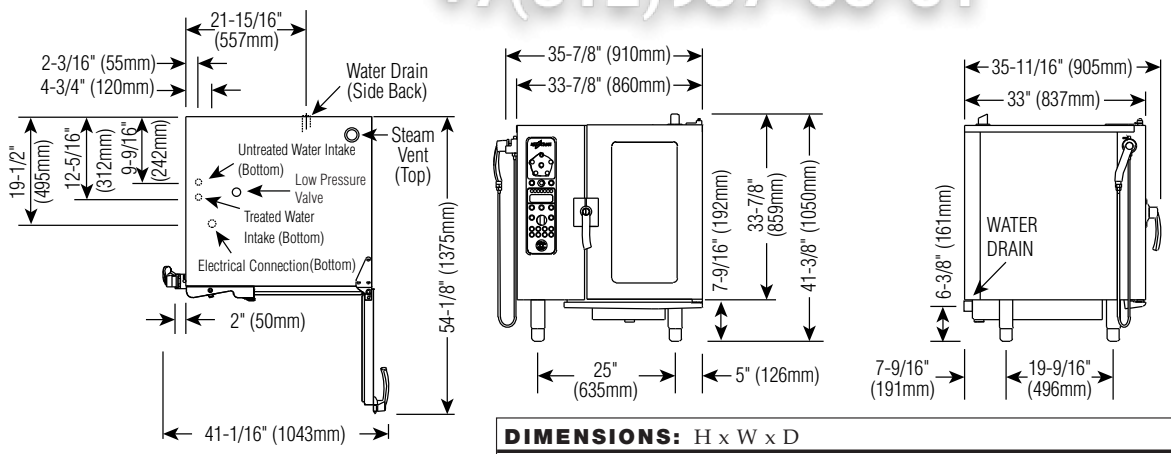

DIMENSIONS: H x W x D

EXTERIOR:
41-3/8" x 35-7/8" x 35-11/16" (1050mm x 910mm x 905mm)

EXTERIOR WITH RETRACTABLE DOOR:
41-3/8" x 39-7/8" x 35-11/16" (1050mm x 1012mm x 905mm)

INTERIOR:
27" x 13-1/4" x 26-1/4" (685mm x 387mm x 665mm)

INSTALLATION REQUIREMENTS

Oven must be installed level.
Hood installation is required.
Water supply shut-off valve and back-flow preventer.

WATER REQUIREMENTS

TWO (2) COLD WATER INLETS - DRINKING QUALITY

ONE (1) TREATED WATER INLET: 3/4" NPT*
ONE (1) UNTREATED WATER INLET: 3/4" NPT*
LINE PRESSURE: 30 to 90 psi 2.8 to 6.2 bar

WATER DRAIN: 1-1/2" CONNECTION WITH AIR GAP

* Can manifold off of one 3/4" line.

CLEARANCE REQUIREMENTS

LEFT: 6" (152mm) PLUS SERVICE ACCESS: 18" (457mm) RECOMMENDED
20" (508mm) FROM HEAT PRODUCING EQUIPMENT
RIGHT: 4" (102mm) TOP: 20" (508mm) FOR AIR MOVEMENT
BACK: 4" (102mm) BOTTOM: 5-1/8" (130mm) FOR LEGS

COUNTER-TOP INSTALLATIONS MUST MAINTAIN 4" (102mm) MINIMUM CLEARANCE FROM COUNTER SURFACE.

WATER QUALITY MINIMUM STANDARDS

USING A WATER SUPPLY NOT MEETING ALTO-SHAAM'S MINIMUM WATER QUALITY STANDARDS WILL VOID THIS WARRANTY. It is the responsibility of the purchaser to ensure that incoming water supply is compliant with the specifications listed through adequate treatment measures. Installation of the CombiGuard™ Water Filtration System is recommended, but this system may not address all water quality issues present.

Contaminant	Inlet Water Requirements (untreated water)
Free Chlorine	Less than 0.1 ppm (mg/L)
Hardness	Less than 3 gpg (52 ppm)
Chloride	Less than 30 ppm (mg/L)
pH	7.0 to 8.5
Alkalinity	Less than 50 ppm (mg/L)
Silica	Less than 12 ppm (mg/L)
Total Dissolved Solids (tds)	Less than 60 ppm

ELECTRICAL

	VOLTAGE	PHASE	CYCLE/HZ	AWG	10•10 ESiN AMPS	10•10 ESiN kW	10•10 ESiN/sk AMPS	10•10 ESiN/sk kW
208-240	at 208	1*	50/60	2 Wire plus ground	67.0	13.9	69.2	14.4
	at 240			AWG 3	77.0	18.4	79.0	18.9
208-240	at 208	3	50/60	3 Wire plus ground	38.6/ph	13.9	40.0/ph	14.4
	at 240			AWG 6	44.3/ph	18.4	45.5/ph	18.9
380-415	at 380	3	50/60	4 Wire plus ground	21.1/ph	13.9	22.0/ph	14.4
	at 415			AWG 10	25.6/ph	18.4	26.3/ph	18.9
440-480	at 440	3*	50/60	3 Wire plus ground	20.0/ph	15.4	21.0/ph	15.9
	at 480			AWG 8	22.0/ph	18.4	23.0/ph	18.9

* ELECTRICAL SERVICE CHARGE APPLIES

WEIGHT

NET	385 lb EST. (175 kg) EST.
SHIP	500 lb EST. (227 kg) EST.
CRATE	49" x 44" x 40" EST.
DIMENSIONS:	(1245 x 1118 x 1016mm)

CAPACITY

		10•10 ESiN	10•10 ESiN/sk
FULL-SIZE PANS:	20" x 12" x 2-1/2"	Ten (10)	Eight (8)
GN 1/1:	530 x 325 x 65mm	Ten (10)	Eight (8)
HALF-SIZE SHEET PANS:* ON WIRE SHELVES ONLY	18" x 13" x 1"	Ten (10)	Nine (9)

120 lb (54 kg) MAXIMUM

VOLUME MAXIMUM: 75 QUARTS (95 LITERS)

*ADDITIONAL WIRE SHELVES REQUIRED FOR MAXIMUM CAPACITY

ELECTRIC COMBITHERM — INSTALLATION MANUAL #7001

ЗипОбщепит
vsezip.ru
+7(812)987-08-81

DOOR ASSEMBLY

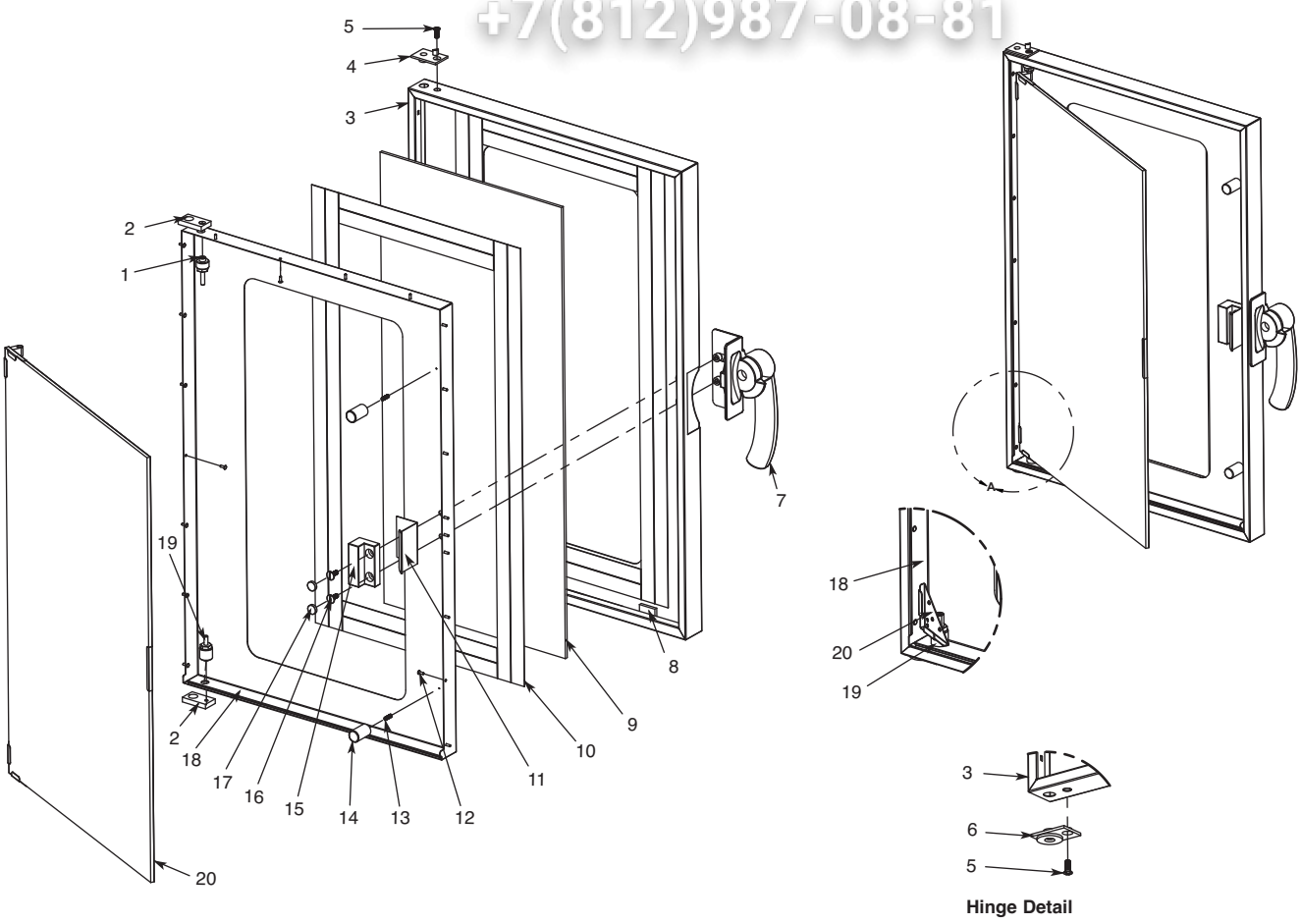

Hinge Detail

Item	Part	Description	Qty.
1	PI-26973	Pin, Upper	1
2	HG-25078	Hinge, CT, Anchor, ML Combis	2
3	1007167	Outer Panel, Door	1
4	HG-25077	Hinge, CT, Top Stop, ML Combi	1
5	SC-22282	Screw, CT, 1.0 x 16 mm, Ph Oval, Hd N/S 18-8, DIN #966A	2
6	HG-25079	Hinge, CT, Upper Ratchet, Combi	1
7	HD-26966	Handle, Door, Right	1
8	BM-27116	Bumper	2
9	GL-27228	Glass Outer, 10.10 Narrow	1
10	TA-25125	Tape, Double Sided	2
11	CL-27854	Inner Door Latch	1
12	RI-27108	Rivet, Sealed	20
13	SC-25091	Screw, CT, M5 x 16, DIN 551, A2 S/S, Sltd Set Screw Flat Pt	2
14	BM-27146	Bumper Stop/Inner Door	2
15	SP-27212	Spacer, Window Latch	1
16	SC-27125	Screw, Truss Head, S/S	2
17	PG-24789	Plug, 15 mm	2
18	5005932	Inner Door Spot RH	1
19	PI-26974	Pin, Lower	1
20	5005934	Inner Door, Glass Assembly	1

ЭлитОбщепит
vsezip.ru
+7(812)987-08-81

RECESSED DOOR ASSEMBLY

(Contact factory.)

ЗипОбщепит
vsezip.ru
+7(812)987-08-81

DIRECTIONAL PANEL ASSEMBLY

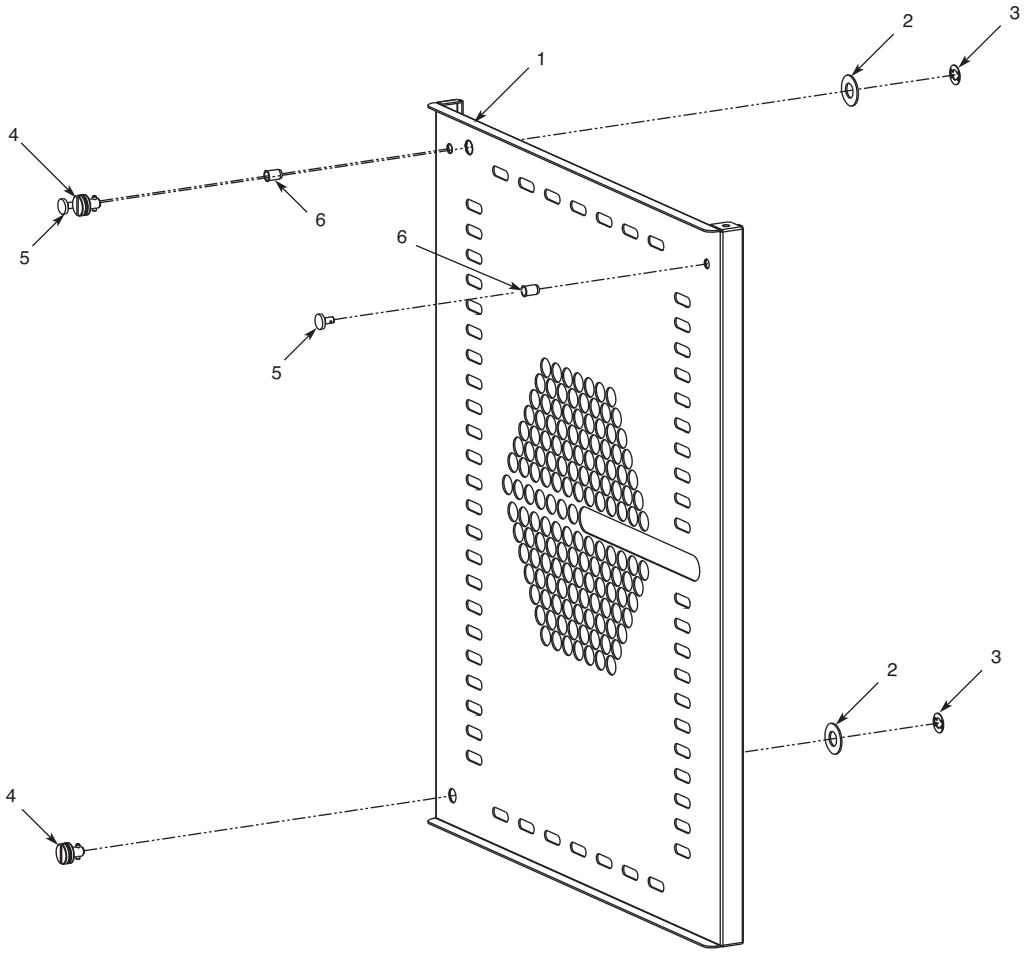

Item	Part	Description	Qty.
1	1005309	Directional Panel	1
2	1006601	Directional Panel Spacer	2
3	WS-24090	Holding (Lock Clip)	2
4	CL-24089	Clip, CT, ML, Lock, W/3 Washers	2
5	SC-22753	Screws, SS Round, Hanging Rack	2
6	NU-22770	Nut, Threaded Insert, M6	2

ЗипОбщепит
vsezip.ru
+7(812)987-08-81

PRESSURE BOX ASSEMBLY

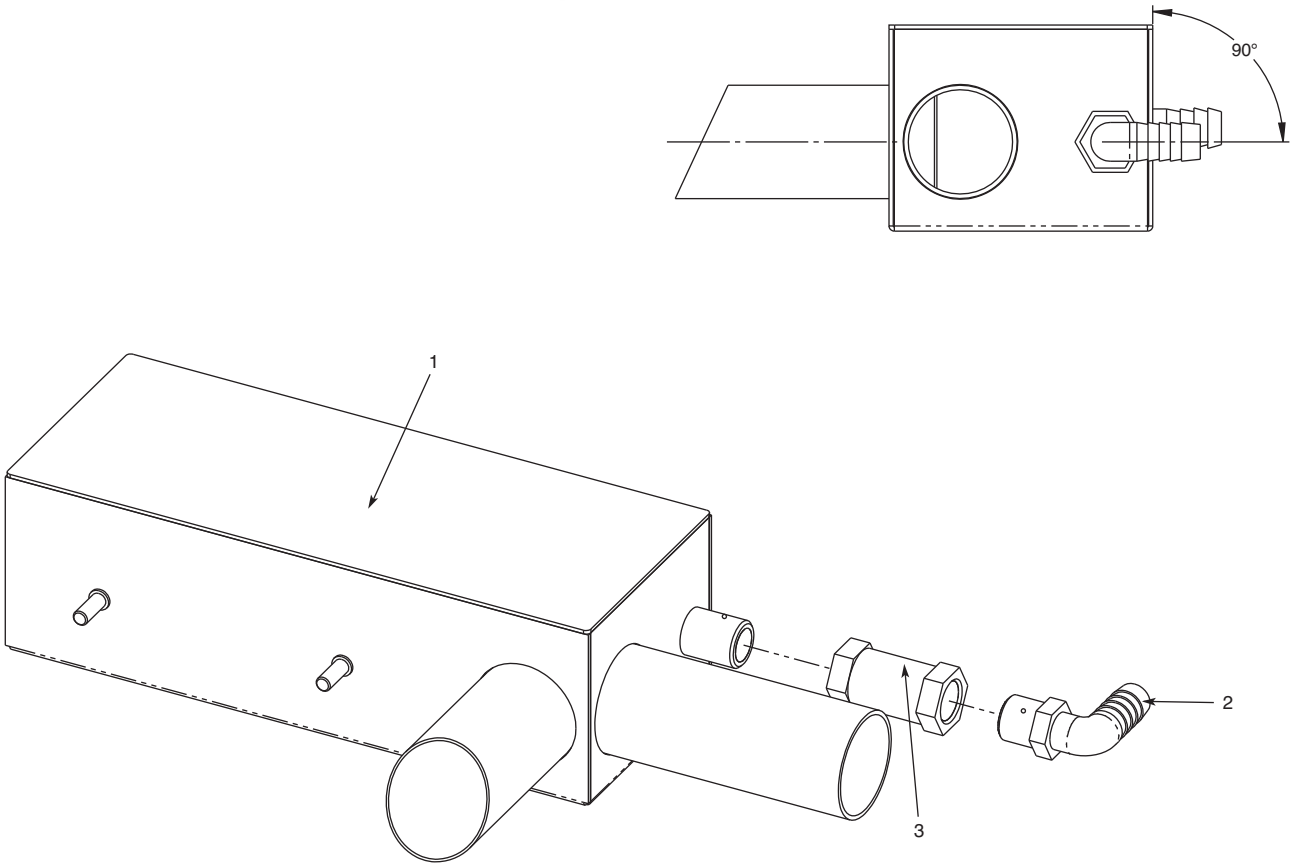

Item	Part	Description	Qty.
1	5005009	Pressure Box	1
2	EB-25551	Elbow, Nylon, 1/2" x 3/8"	1
3	VA-25549	Valve, 3/8", Flow Control, 0.12 GPM	1

Зип Общепит
Wzip.ru
+7(812)987-08-81

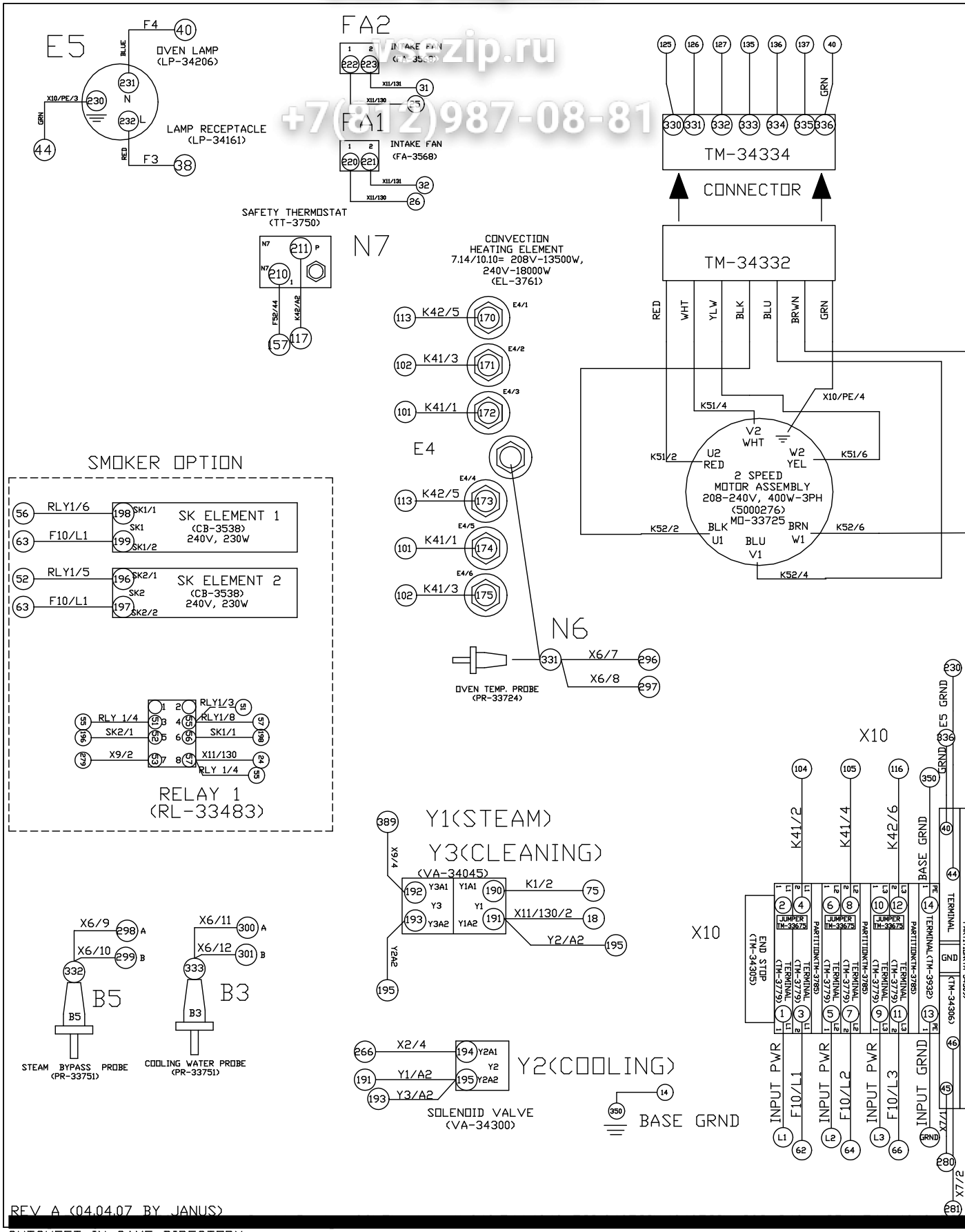

REV A (04.04.07 BY JANUS)

CUTSHEET IN SAME DIRECTORY

Зип Общепит
vsezip.ru
+7(812)987-08-81

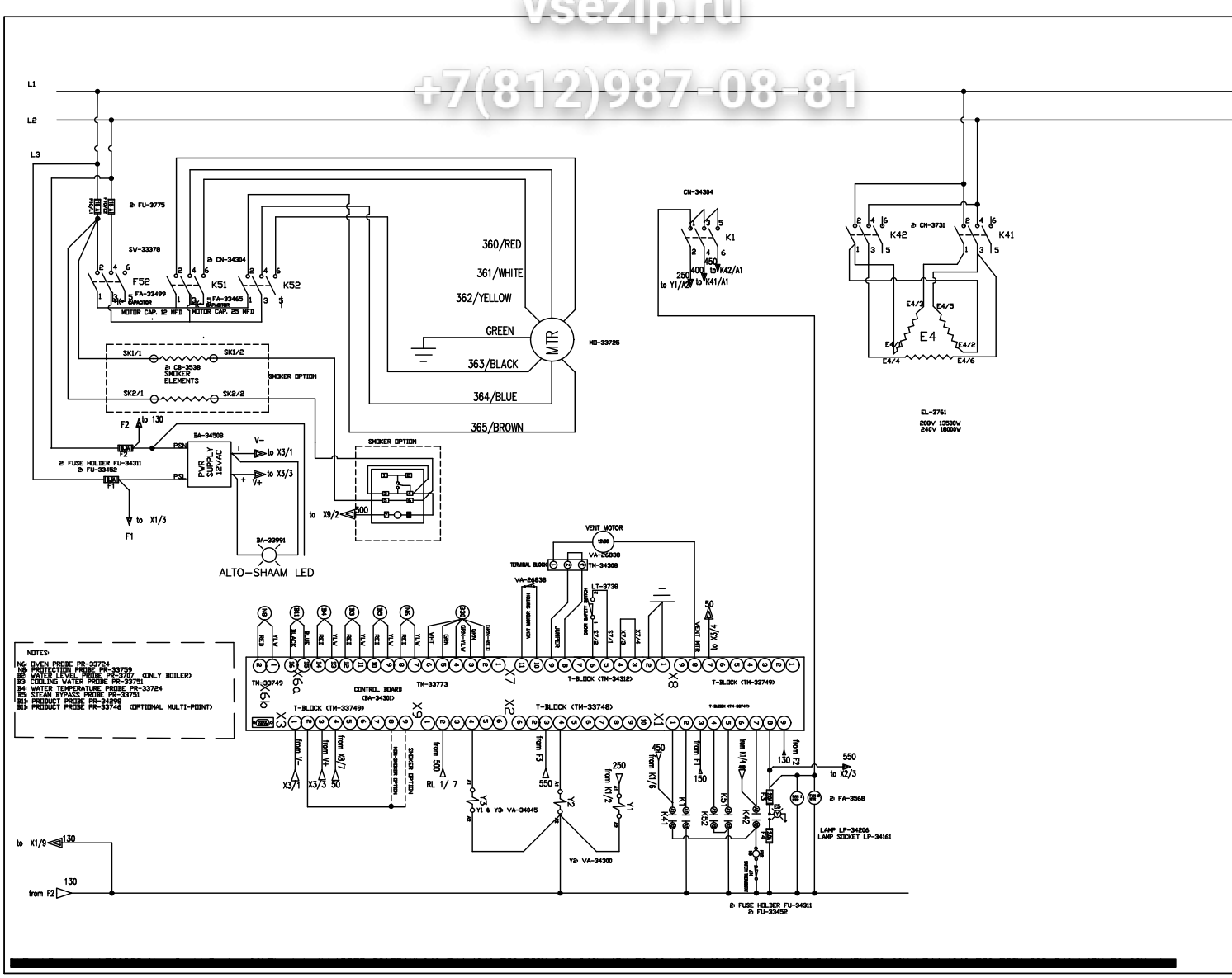

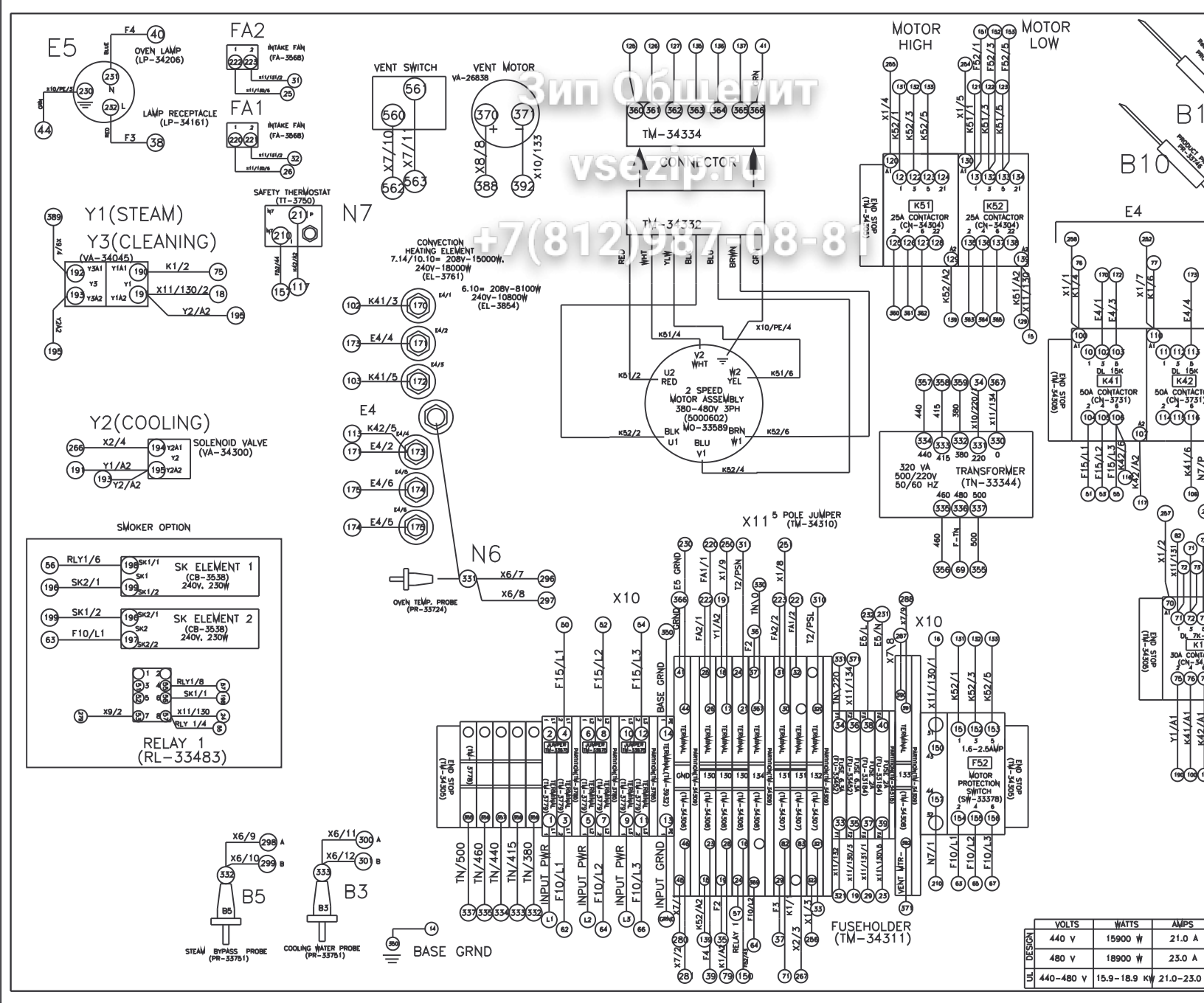

DESIGN	VOLTS	WATTS	AMPS
UL	440 V	15900 W	21.0 A
	480 V	18900 W	23.0 A
	440-480 V	15.9-18.9 KW	21.0-23.0

Зип Общепит
vsezip.ru
+7(812)987-08-81

Зип Общепит
vsezip.ru
+7(812)987-08-81

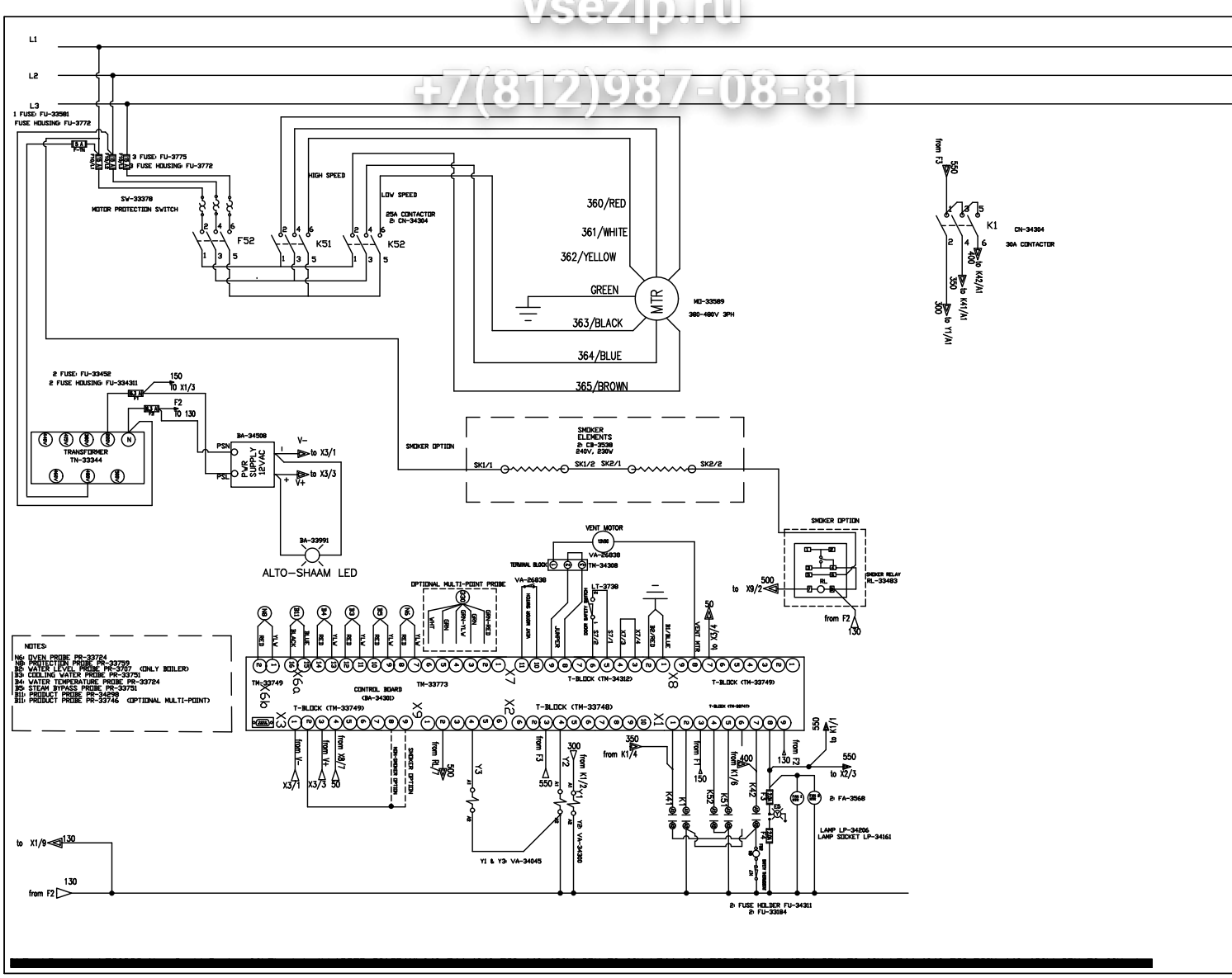

Зип Общепит
vsezip.ru
+7(812)987-08-81

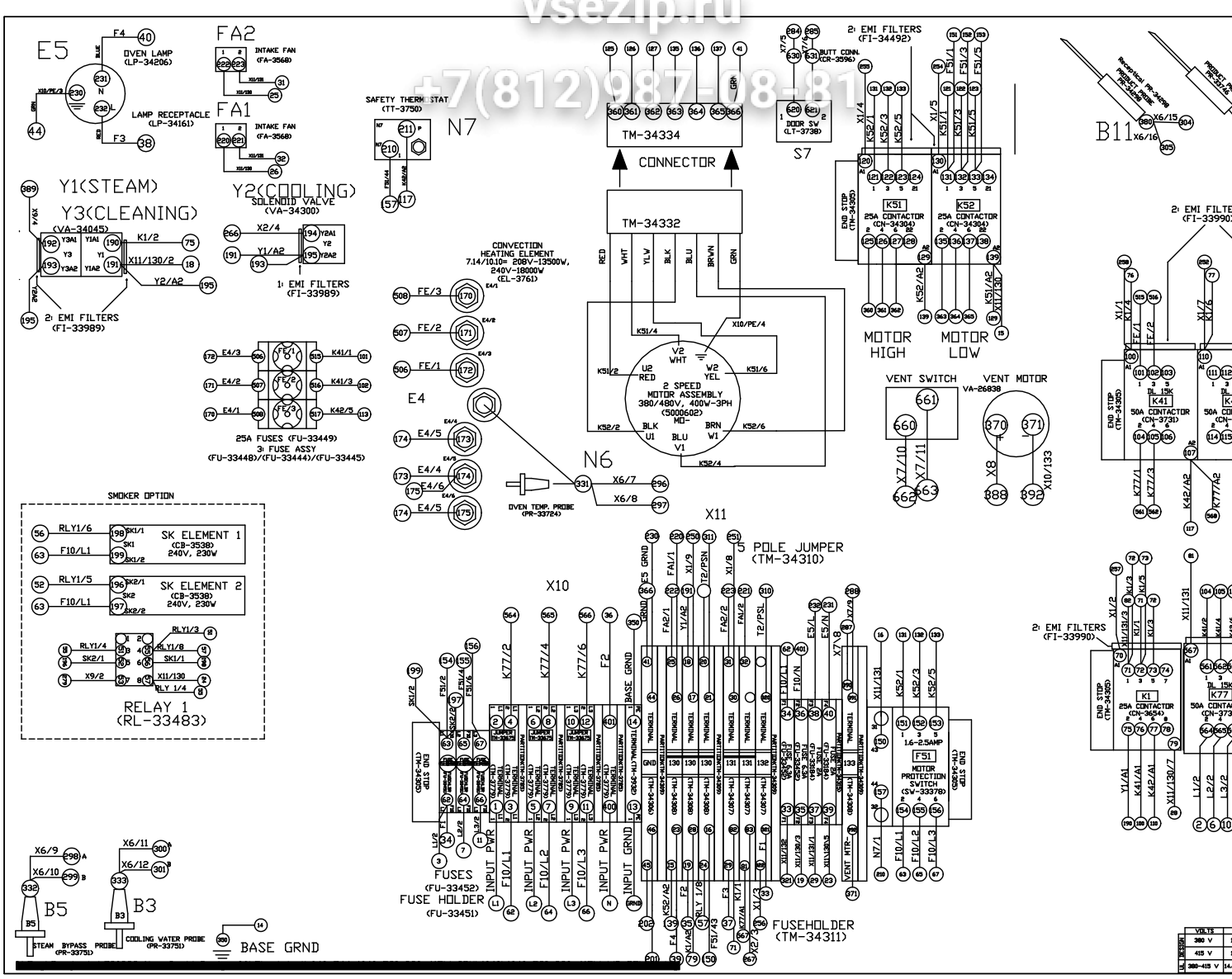

Зип Общепит
vsezip.ru
+7(812)987-08-81

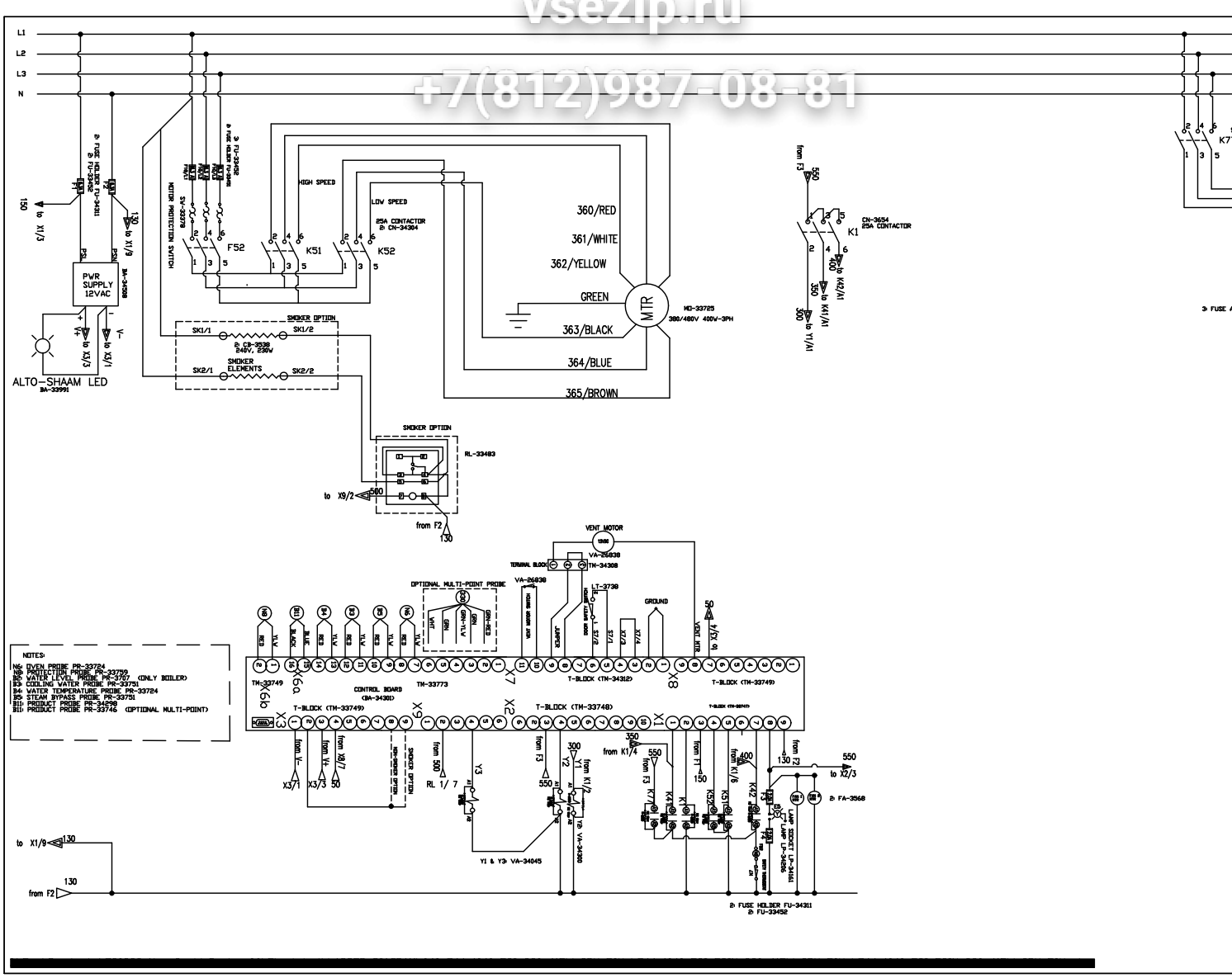

Зип Общепит
vsezip.ru
+7(812)985-08-81

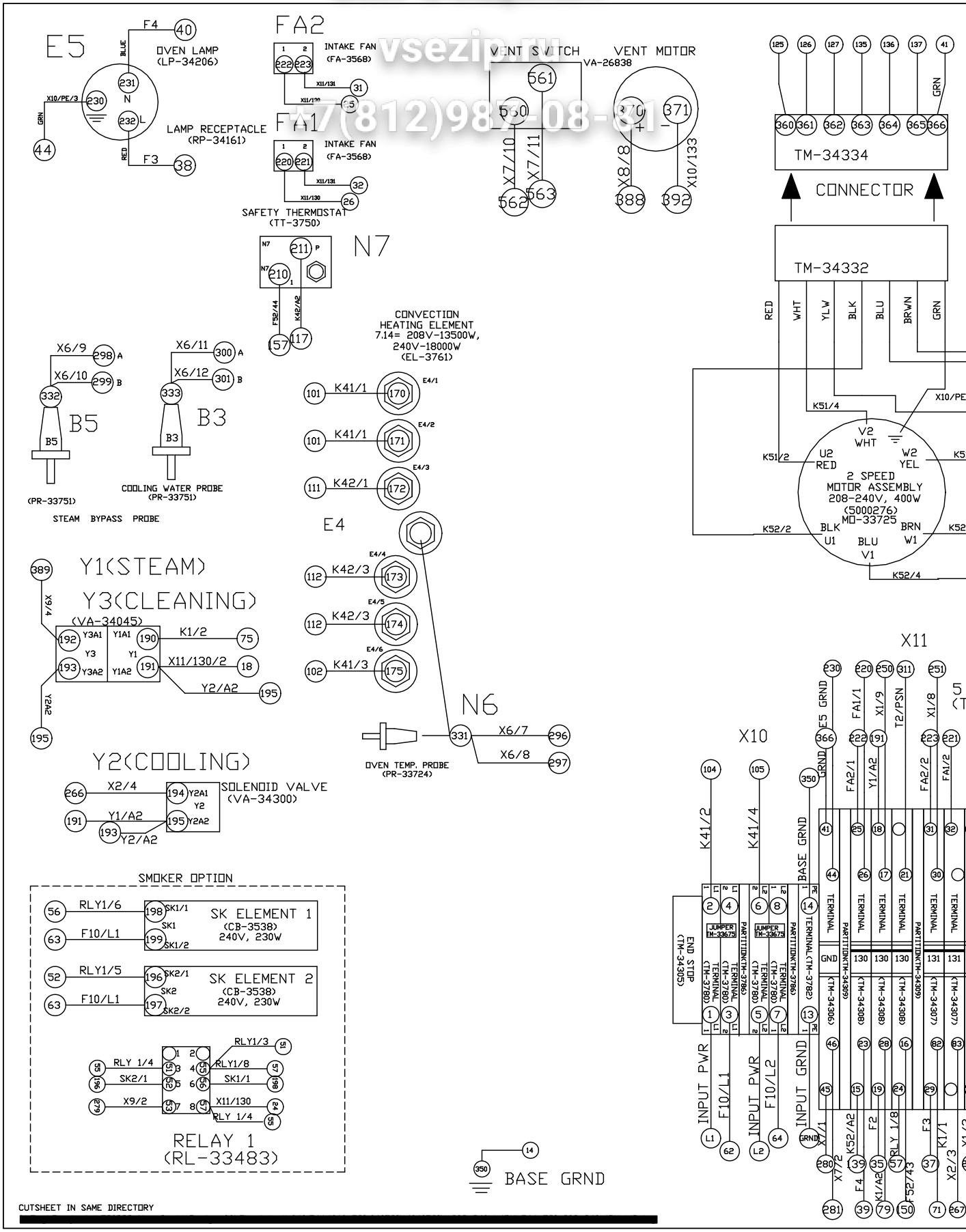

CUTSHEET IN SAME DIRECTORY

Зип Общепит
vsezip.ru
+7(812)987-08-81

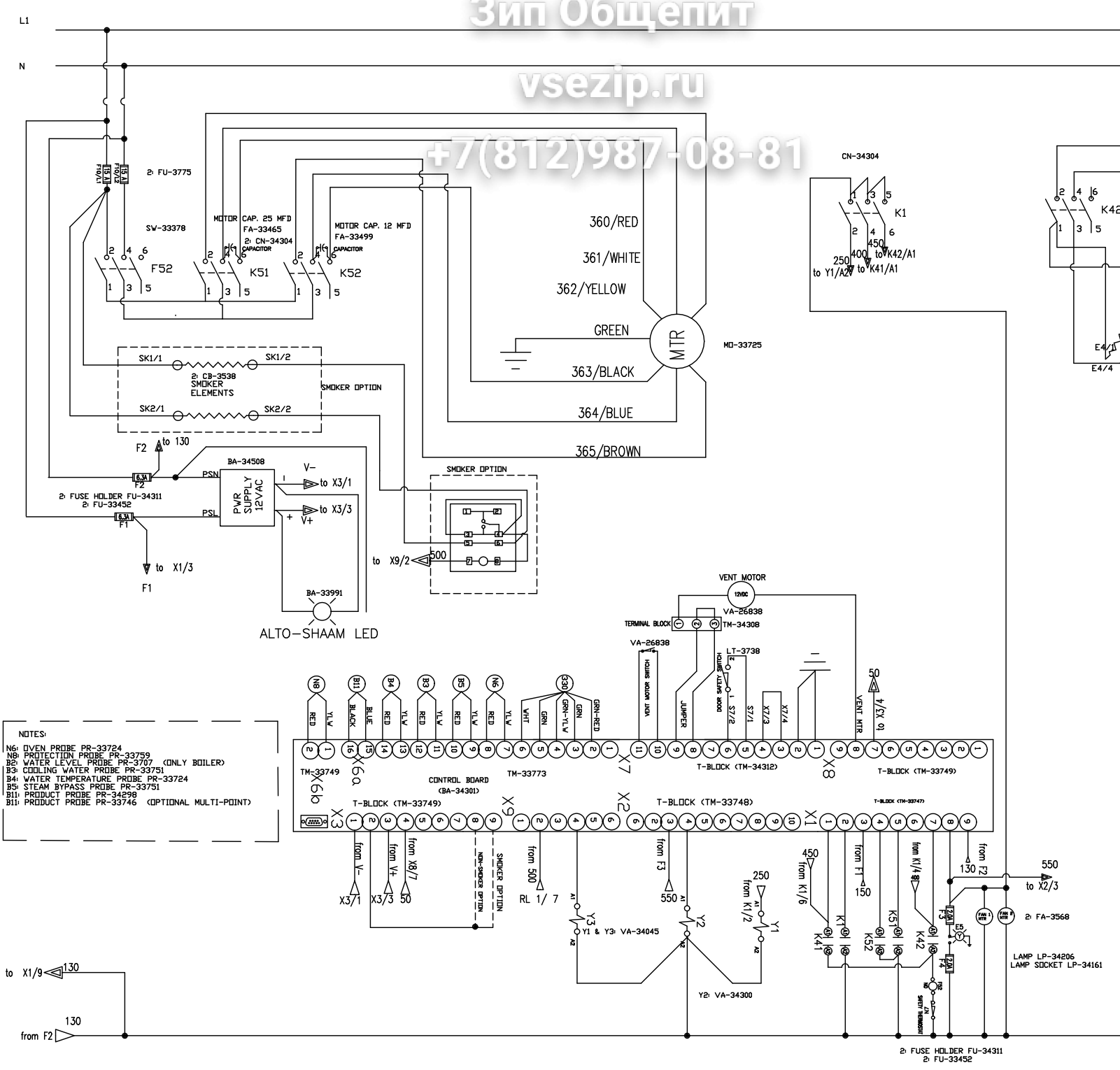

NOTES:
N6: OVEN PROBE PR-33724
N8: PROTECTION PROBE PR-33759
B2: WATER LEVEL PROBE PR-3707 (ONLY BOILER)
B3: COOLING WATER PROBE PR-33751
B4: WATER TEMPERATURE PROBE PR-33724
B5: STEAM BYPASS PROBE PR-33751
B11: PRODUCT PROBE PR-34298
B11: PRODUCT PROBE PR-33746 (OPTIONAL MULTI-POINT)

Зип Общепит
vsezip.ru
+7(812)987-08-81

SECTION CONTENTS

Technical Data 188

Parts Information 189
Door Assembly 189
Recessed Door Assembly (Prior to June '08) 190
Recessed Door Assembly (June '08 and After) 191
Directional Panel Assembly 192
Steam Generator Assembly 193

Wiring and Ladder Diagrams 194
208-240V 3PH 50/60 Hz Wiring 194
208-240V 3PH 50/60 Hz Ladder 195
440-480V 3PH 50/60 Hz Wiring 196
440-480V 3PH 50/60 Hz Ladder 197
380-415V 3PH 50 Hz Wiring 198
380-415V 3PH 50 Hz Ladder 199
208-240V 1PH 50/60 Hz Wiring 200
208-240V 1PH 50/60 Hz Ladder 201

Return to Main Table of Contents 3

Зип Общепит
vsezip.ru
+7(812)987-08-81

7•14ES SPECIFICATIONS

ALTO SHAAM COMBITHERM

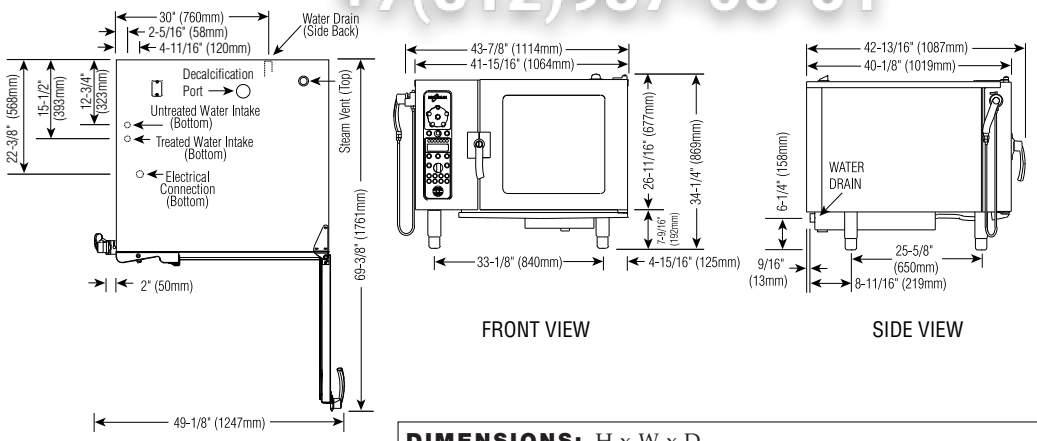

TOP VIEW | FRONT VIEW | SIDE VIEW

INSTALLATION REQUIREMENTS

Oven must be installed level.
Hood installation is required.
Water supply shut-off valve and back-flow preventer.

DIMENSIONS: H x W x D

EXTERIOR:
34-1/4" x 43-7/8" x 42-13/16" (869mm x 1114mm x 1087mm)

EXTERIOR WITH RETRACTABLE DOOR:
34-1/4" x 47-7/8" x 42-13/16" (869mm x 1216mm x 1087mm)

INTERIOR:
20-5/16" x 23-1/2" x 28-7/16" (515mm x 596mm x 722mm)

WATER REQUIREMENTS

TWO (2) COLD WATER INLETS - DRINKING QUALITY

ONE (1) TREATED WATER INLET:	3/4" NPT*	
ONE (1) UNTREATED WATER INLET:	3/4" NPT*	
LINE PRESSURE:	30 to 90 psi	2.8 to 6.2 bar

WATER DRAIN: 1-1/2" CONNECTION WITH AIR GAP

* Can manifold off of one 3/4" line.

WATER QUALITY MINIMUM STANDARDS

USING A WATER SUPPLY NOT MEETING ALTO-SHAAM'S MINIMUM WATER QUALITY STANDARDS WILL VOID THIS WARRANTY. It is the responsibility of the purchaser to ensure that incoming water supply is compliant with the specifications listed through adequate treatment measures. Installation of the CombiGuard™ Water Filtration System is recommended, but this system may not address all water quality issues present.

Contaminant	Inlet Water Requirements (untreated water)
Free Chlorine	Less than 0.1 ppm (mg/L)
Hardness	Less than 3 gpg (52 ppm)
Chloride	Less than 30 ppm (mg/L)
pH	7.0 to 8.5
Alkalinity	Less than 50 ppm (mg/L)
Silica	Less than 12 ppm (mg/L)
Total Dissolved Solids (tds)	Less than 60 ppm

CLEARANCE REQUIREMENTS

LEFT: 6" (152mm) PLUS SERVICE ACCESS: 18" (457mm) RECOMMENDED
20" (508mm) FROM HEAT PRODUCING EQUIPMENT

RIGHT: 4" (102mm) TOP: 20" (508mm) FOR AIR MOVEMENT

BACK: 4" (102mm) BOTTOM: 5-1/8" (130mm) FOR LEGS

COUNTER-TOP INSTALLATIONS MUST MAINTAIN 4" (102mm) MINIMUM CLEARANCE FROM COUNTER SURFACE.

ELECTRICAL

	VOLTAGE	PHASE	CYCLE/HZ	AWG	AMPS	kW
208-240	at 208	1*	50/60	2 Wire plus ground	67.0	13.9
	at 240			AWG 3	77.0	18.4
208-240	at 208	3	50/60	3 Wire plus ground	38.5/ph	13.8
	at 240			AWG 6	44.0/ph	18.3
380-415	at 380	3	50/60	4 Wire plus ground	21.5/ph	14.2
	at 415			AWG 10	25.6/ph	18.4
440-480	at 440	3*	50/60	3 Wire plus ground	20.0/ph	15.4
	at 480			AWG 8	22.0/ph	18.4

* ELECTRICAL SERVICE CHARGE APPLIES

WEIGHT

NET	416 lb	(189 kg)
SHIP	540 lb	(245 kg)
CRATE	52" x 50" x 46" EST.	
DIMENSIONS:	(1321 x 1270 x 1168mm)	

CAPACITY

FULL-SIZE PANS:	20" x 12" x 2-1/2"	Fourteen (14)
GN 1/1:	530 x 325 x 65mm	Fourteen (14)
GN 2/1:	650 x 530 x 65mm	Seven (7)
FULL-SIZE SHEET PANS:* ON WIRE SHELVES ONLY	18" x 26" x 1"	Seven (7)

168 lb (76 kg) MAXIMUM

VOLUME MAXIMUM: 105 QUARTS (133 LITERS)

*ADDITIONAL WIRE SHELVES REQUIRED FOR MAXIMUM CAPACITY

ELECTRIC COMBITHERM — INSTALLATION MANUAL #7001

ЗипОбщепит
vsezip.ru
+7(812)987-08-81

DOOR ASSEMBLY

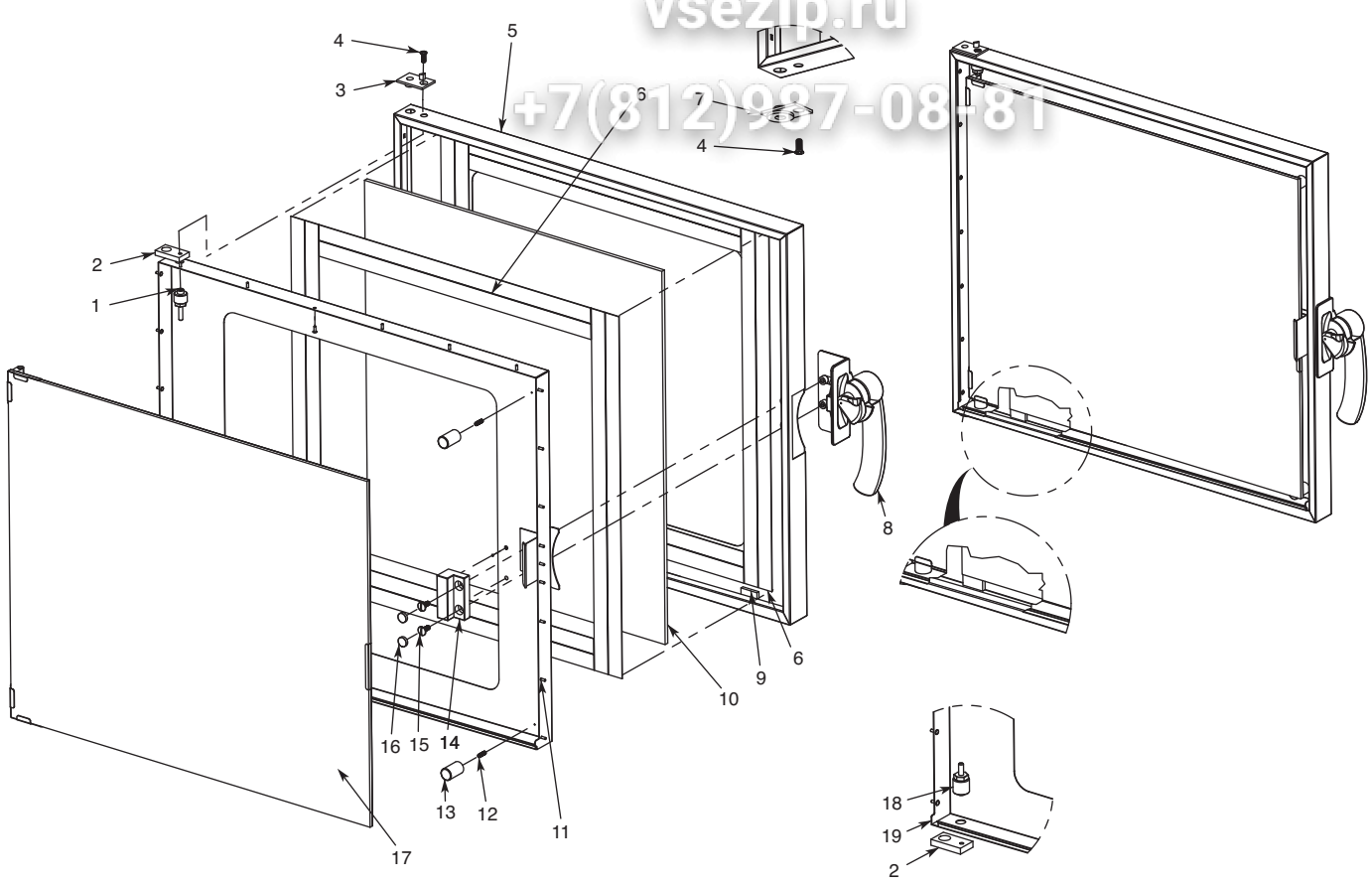

Hinge Pin Detail

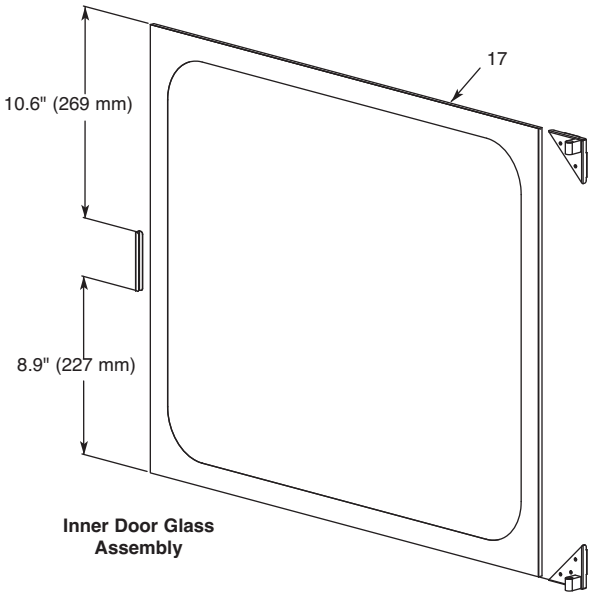

Inner Door Glass Assembly

Item	Part	Description	Qty.
1	PI-26973	Pin, Upper	1
2	HG-25078	Hinge, CT, Anchor, ML Combis	2
3	HG-25077	Hinge, CT, Top Stop, ML Combi	1
4	SC-22282	Screw, CT, 1.0X 16 mm, PH Oval, HD N/S 18-8, DIN # 966A	2
5	1005957	Outer Panel, Door	1
6	TA-25125	Tape, Double Sided	2
7	HG-25079	Hinge, CT, Upper Ratchet, Combi	1
8	HD-26966	Handle, Door, Right, Combi '06	1
9	BM-27116	Bumper	2
10	GL-27110	Glass, Outer Door, 7.14 EP	1
11	RI-27108	Rivet, Sealed	22
12	SC-25091	Screw, CT, M5X16, DIN 551, A2 S/S, SLTD Set Screw Flat PT	2
13	BM-27146	Bumper Stop/Inner Door	2
14	SP-27212	Spacer, Window Latch	1
15	SC-27125	Screw, Truss Head, S/S	2
16	PG-24789	Plug, 15 mm	2
17	5005090	Inner Door, Glass Assembly	1
18	PI-26974	Pin, Lower	1
19	5005089	Inner Door Spot RH	1
*	CL-27854	Inner Door Latch	1

*Item Not Shown

ЗипОбщепит
vsezip.ru
+7(812)987-08-81

RECESSED DOOR ASSEMBLY (PRIOR TO JUNE '08)

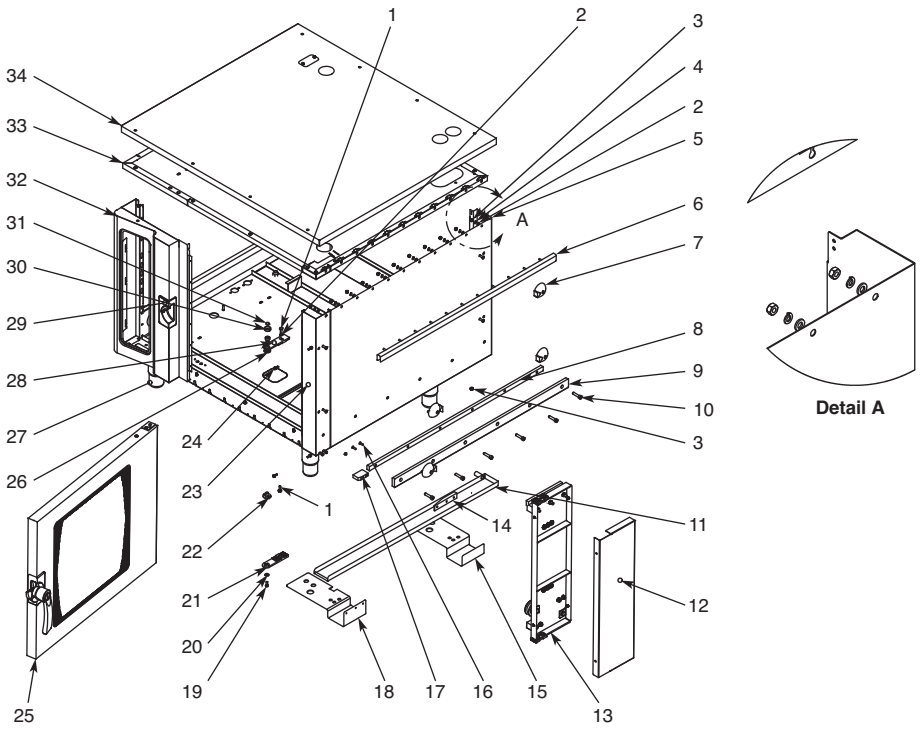

Item	Part	Description	Qty.
1	SC-22924	M6 x 20 Hex Trim HD	2
2	WS-22297	Washer, Flat, M6, DIN 125	14
3	NU-22291	M6-1.0 x Hex S/S Nut 18-8	12
4	WS-22302	Washer, Lock, M6, DIN 127B	12
5	5008015	Right Side Assembly	1
6	5007897	Channel Assembly	1
7	BK-27412	Recessed Door Block	4
8	RA-28207	Rail, Top	1
9	RA-28208	Rail, Bottom	1
10	SC-24388	Screw, SHC M8 x 35 S/S	6
11	5007893	Drip Pan Assembly	1
12	1008869	Cover, Trolley	1
13	5008001	Trolley Assembly	1
14	BK-22100	White Teflon, Cart Guide Block	1
15	1008505	Rear Bracket, Recessed	1
16	SC-22281	Screw, M5 x 16 Flat Head CSink	2
17	BK-28252	Block, Guide	1

Item	Part	Description	Qty.
18	1008506	Front Bracket Recessed	1
19	SC-22284	Screw, M6 x 16 Hex S/S HD	1
20	WS-22298	Washer, M8, 18-8	1
21	HG-28040	Hinge	1
22	HG-25101	Hinge, Lower Ratchet	1
23	5008014	Front Corner Assembly	1
24	SC-26060	M5 x 16 Hex Head	4
25	5008004	Door Assembly Recessed	1
26	WS-25124	Eccesntric Washer	1
27	LG-26867	Legs, Combi	4
28	HG-28041	Hinge	1
29	LT-26968	Latch, Door, Right	1
30	WS-25127	Covering Washer, For Hinge	1
31	PG-25132	M12, (Black or Natural)	1
32	PE-27559	Front Panel Weld Assembly	1
33	5005065	Fill In Cover Assembly	1
34	5007895	Outer Cover Assembly	1

ЗипРазбор
vsezip.ru
+7(812)987-08-81

RECESSED DOOR ASSEMBLY (JUNE '08 AND AFTER)

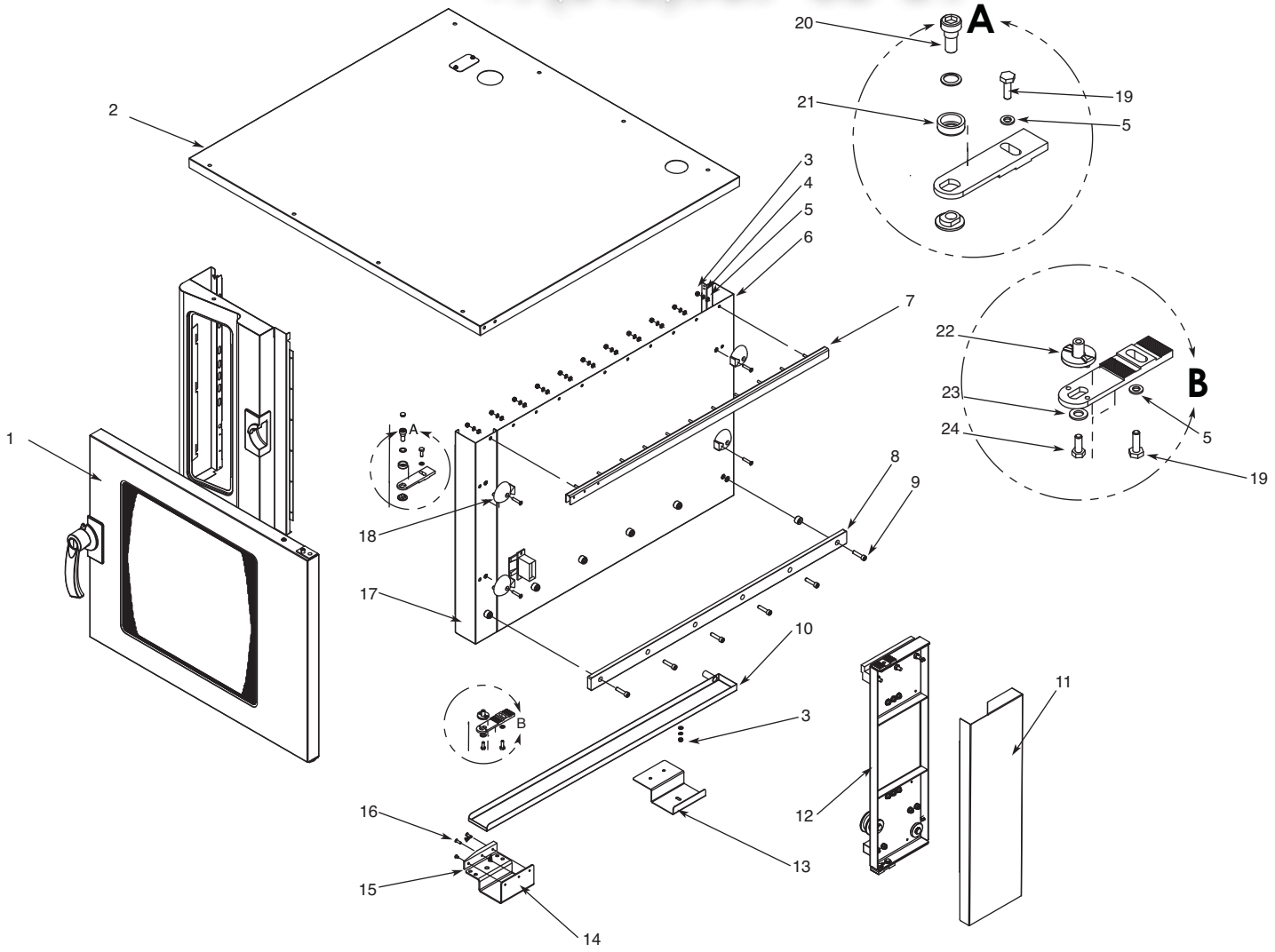

Item	Part	Description	Qty.
1	5008004	Door Assembly Recessed	1
2	5008458	Outer Cover Assembly	1
3	NU-22291	M6-1.0 x Hex S/S Nut 18-8	12
4	WS-22302	Washer, Lock, M6, DIN 127B	12
5	WS-22297	Washer, Flat	14
6	5008848	Right Side Assembly	1
7	5007897	Channel Assembly	1
8	RA-28208	Rail	1
9	SC-24388	Screw, SHC M8 x 35 S/S	6
10	5007893	Drip Pan Assembly	1
11	1009543	Cover, Trolley	1
12	5008001	Trolley Assembly	1

Item	Part	Description	Qty.
13	1009578	Rear Drip Tray Bracket	1
14	1009546	Front Bracket Recessed	1
15	BK-22100	White Teflon, Cart Guide Block	1
16	SC-22281	Screw, M5 x 16 Flat Head CSink	2
17	5008014	Front Corner Assembly	1
18	SC-27284	Screw, M6 x 30 Flat Head	4
19	SC-22924	Screw, M6 x 20 Hex Trim HD	2
20	SC-25102	Upper Hinger Axis Screw	1
21	WS-25127	Covering Washer, For Hinge	1
22	HG-25101	Hinge, Lower Ratchet	1
23	WS-22298	Washer, M8, 18-8	1
24	SC-22284	Screw, M6 x 16 Hex S/S Head	1

ЗипОбщепит
vsezip.ru
+7(812)987-08-81

DIRECTIONAL PANEL ASSEMBLY

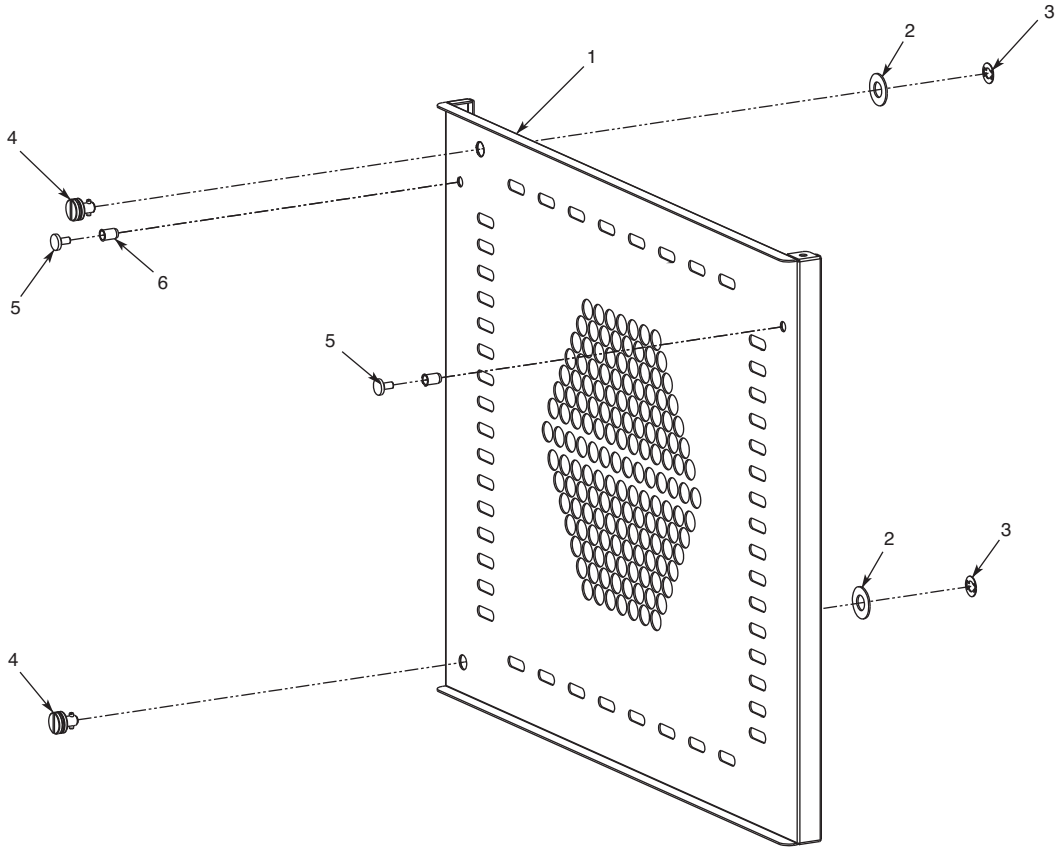

Item	Part	Description	Qty.
1	1006474	Directional Panel	1
2	1006601	16 GA Directional Panel Spacer	2
3	WS-24090	Holding (Lock Clip), All Combi's ML	2
4	CL-24089	Clip, CT, ML, Lock, W/3 Washers	2
5	SC-22753	Screw, SS Round, Hanging Rack	2
6	NU-22770	Nut, Threaded Insert, M6	2

ЗипОбщепит
vsezip.ru
+7(812)987-08-81

STEAM GENERATOR ASSEMBLY

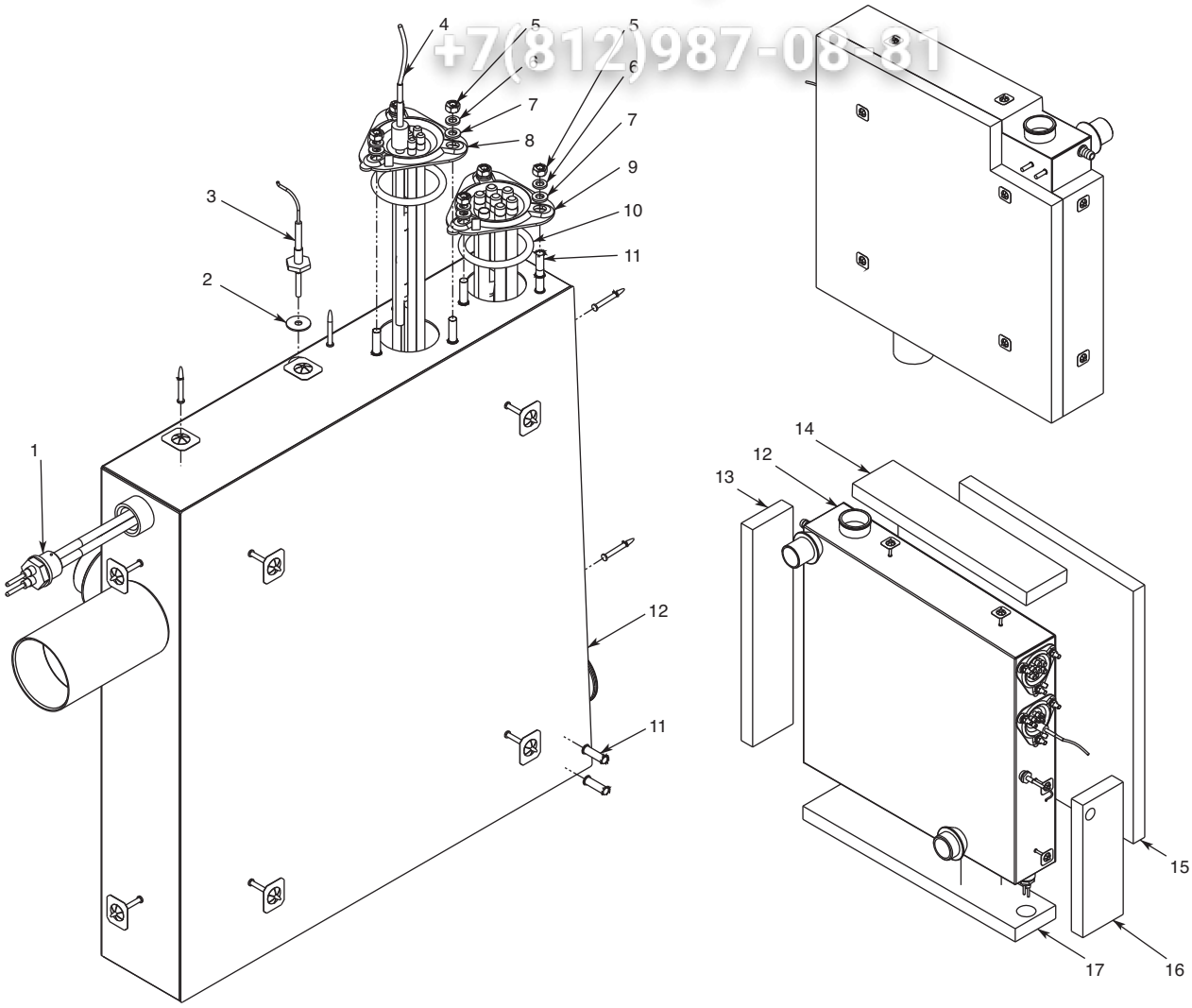

Item	Part	Description	Qty.
1	PR-3706	CT, Water Lev. Lg 3/4" NPT Fitting, 316 S/S Electr.	1
2	SA-25061	CT, T-Couple Probe, ML Combi	1
3	PR-33724	CT, ML Combi, Thermocouple, 1650 mm Wire Length	1
4	PR-33759	CT, ML, Combi, Temperature Sensor	1
5	NU-22291	M6-1.0 x Hex S/S Nut 18-8	6
6	WS-22302	Washer, M6 DIN # 127B	6
7	WS-22297	Washer, Flat, M6 DIN 125	6
8	EL-33412	CT, Heater, ML, Combi Immersion, 6kw, Flanged	1
9	EL-33411	CT, Heater, ML, Combi Immersion, 9kw, Flanged	1
10	SA-23932	O-Ring, 14 mm x 2.5 mm Viton	2
11	ST-22278	Stud M6 x 20 mm	8
12	5004590	Generator Weld	1
13	IN-27239	Insulation, Steam Gen, Heater Side	1
14	IN-27241	Insulation, Steam Gen, Top	1
15	IN-27238	Insulation, Steam Gen, Drip Tube Side	1
16	IN-27240	Insulation, Steam Gen, Bottom	1
17	CL-22259	Insulation Spike Cup	12
*	IN-27237	Insulation, Steam Gen, Back	1

*Item Not Shown

Зип Общепит
vsezip.ru
+7(812)987-08-81

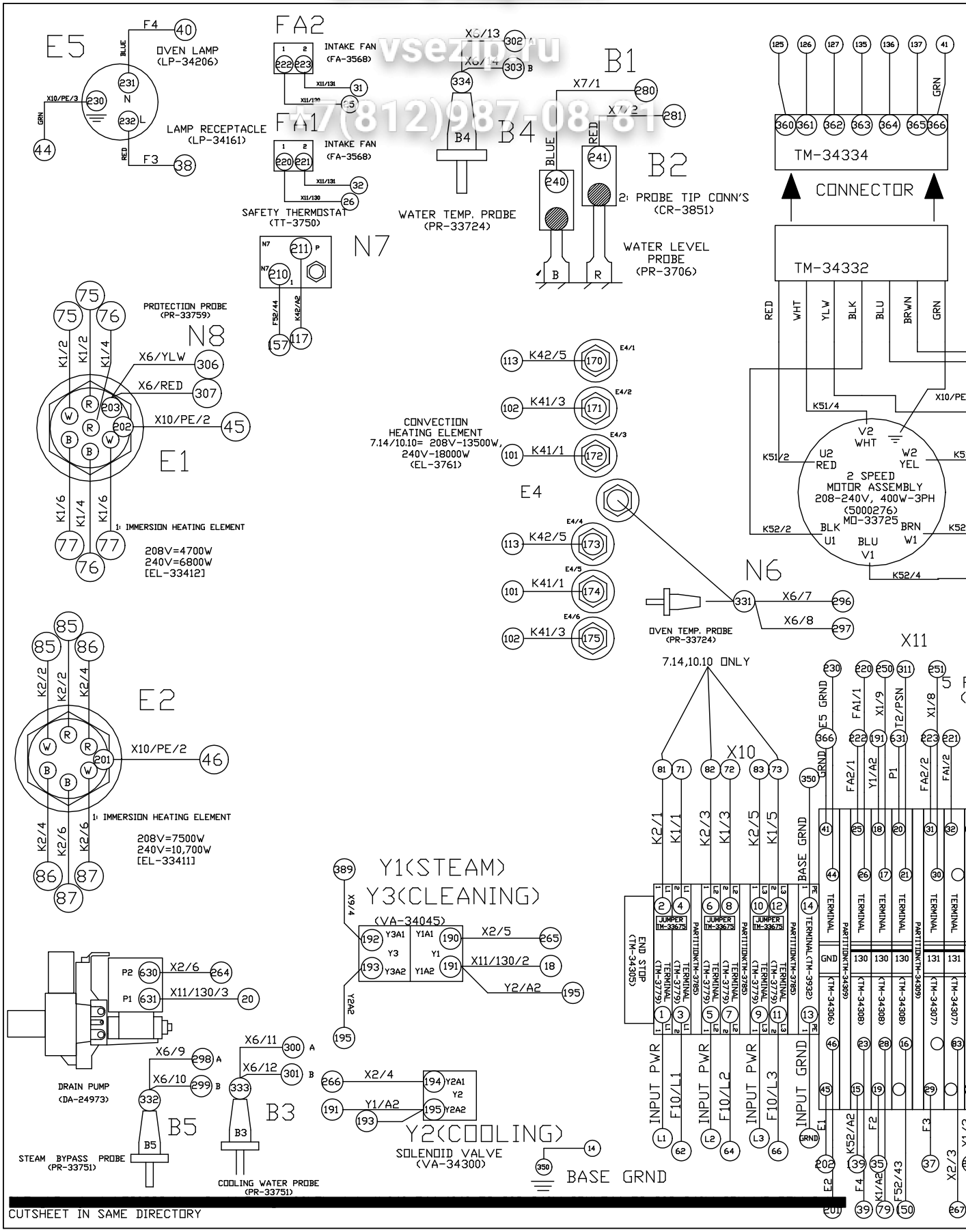

Зип Общепит
vsezip.ru
+7(812)987-08-81

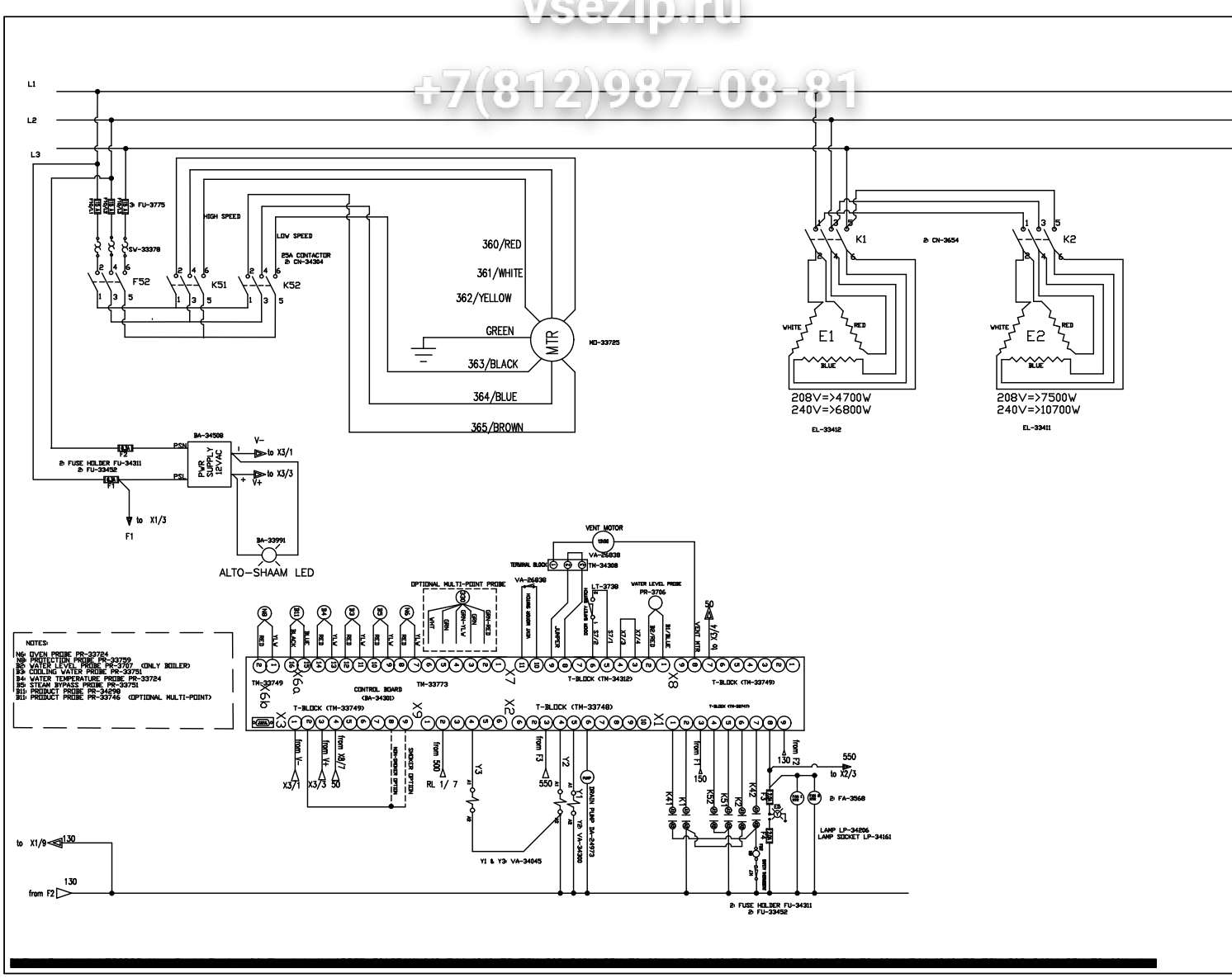

Зип Общепит
vsezip.ru
+7(812)987-08-81

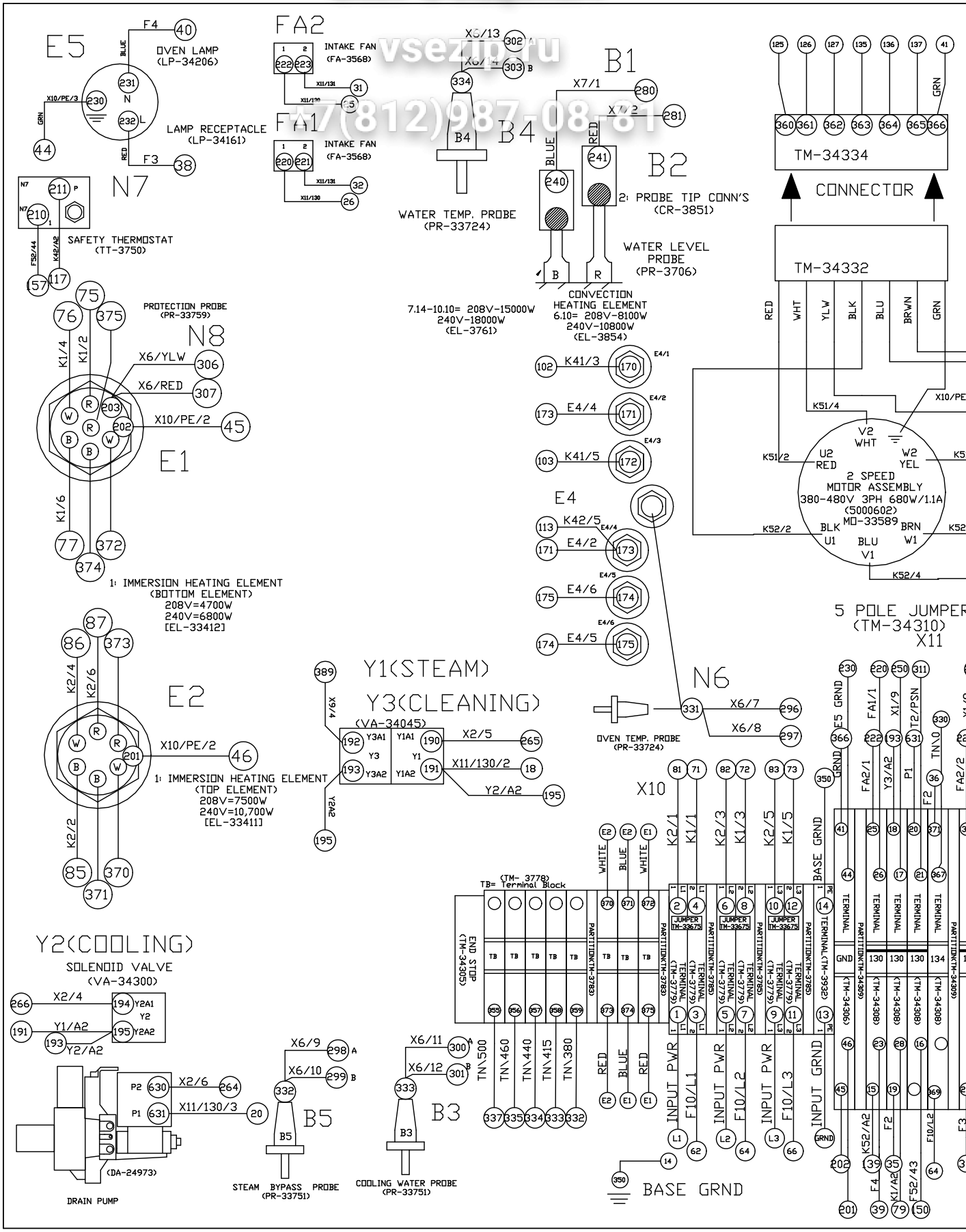

Зип Общепит
vsezip.ru
+7(812)987-08-81

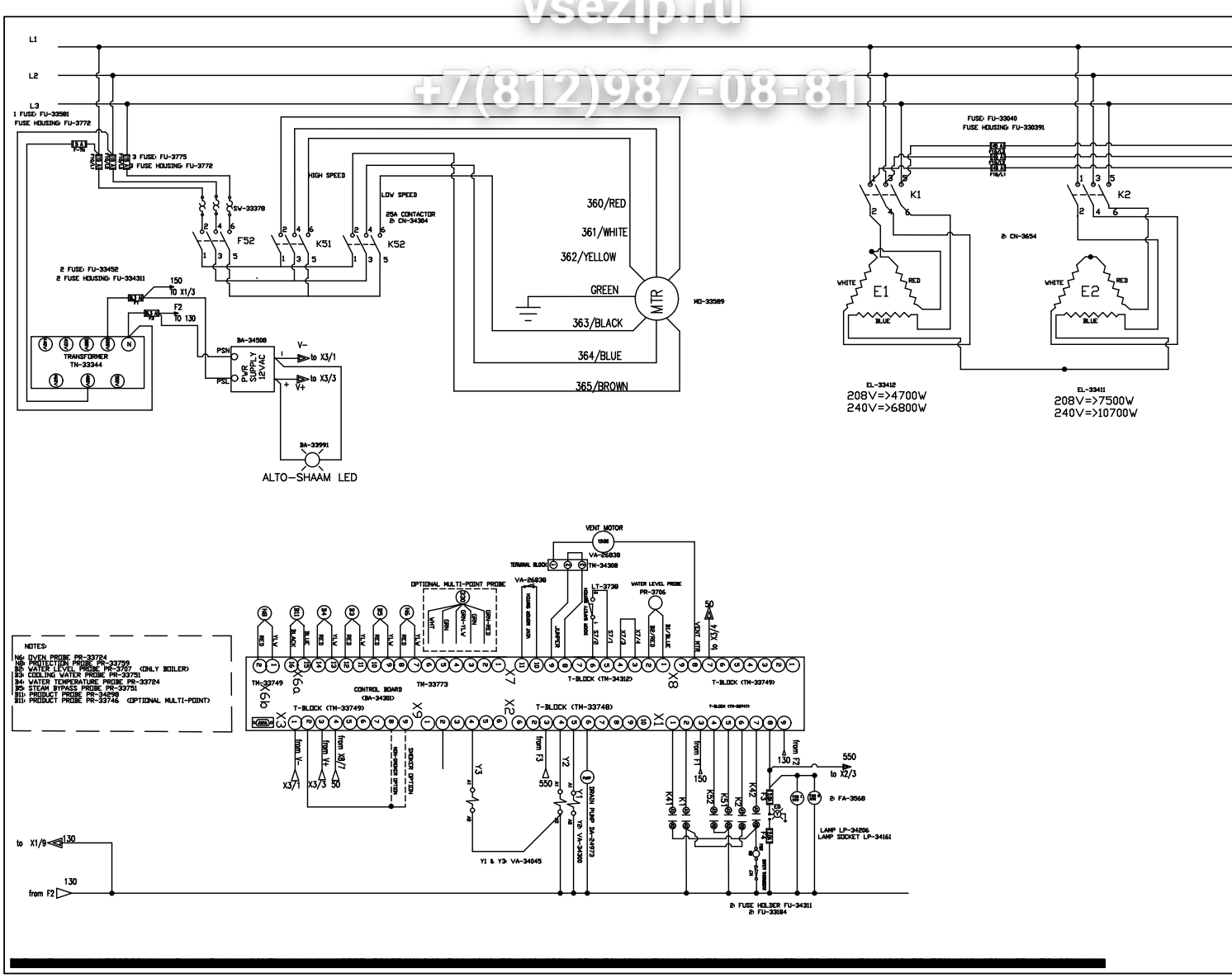

Зип Общепит
vseziu.ru
+7 (812) 987-08-81

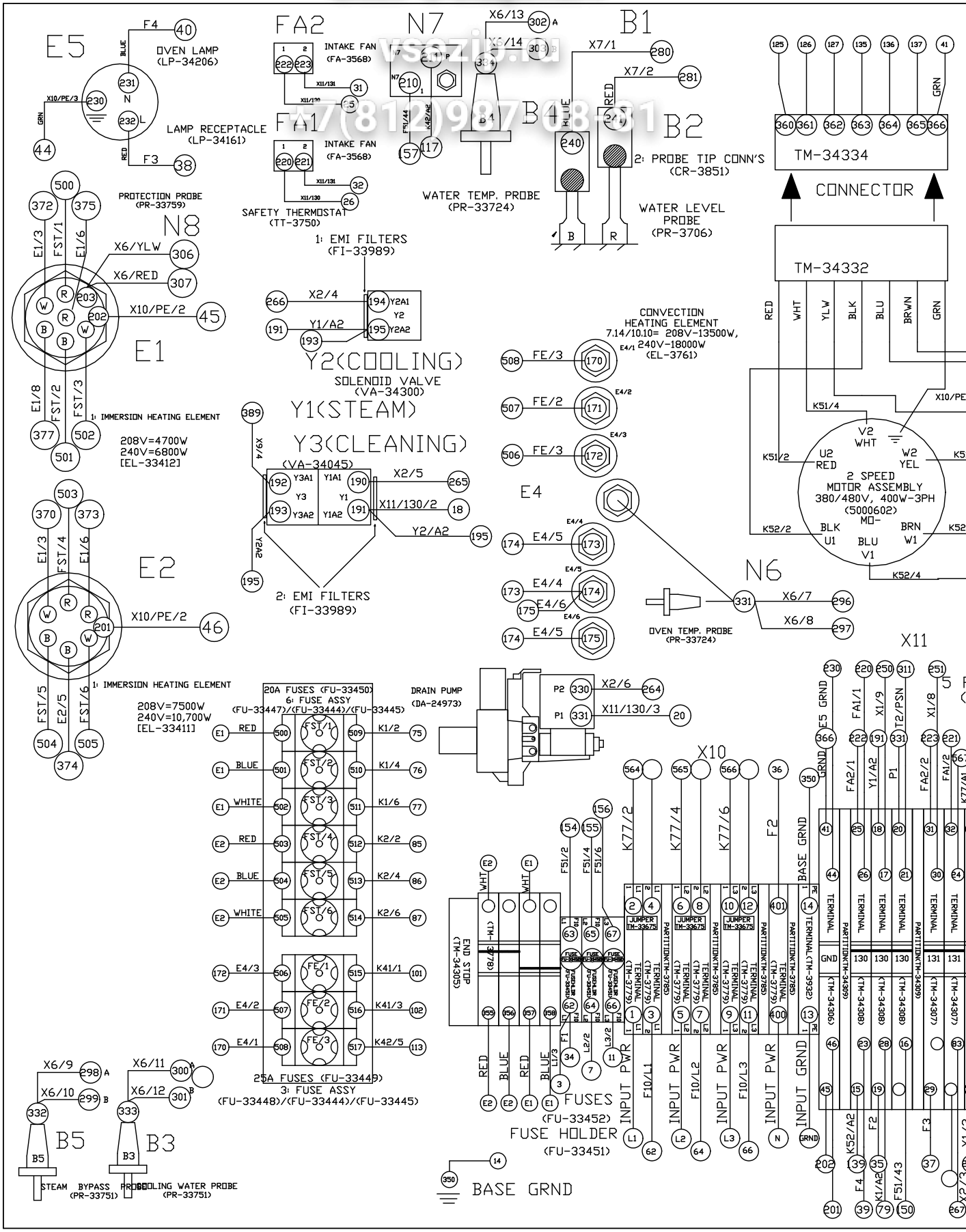

Зип Общепит
vsezip.ru
+7(812)987-08-81

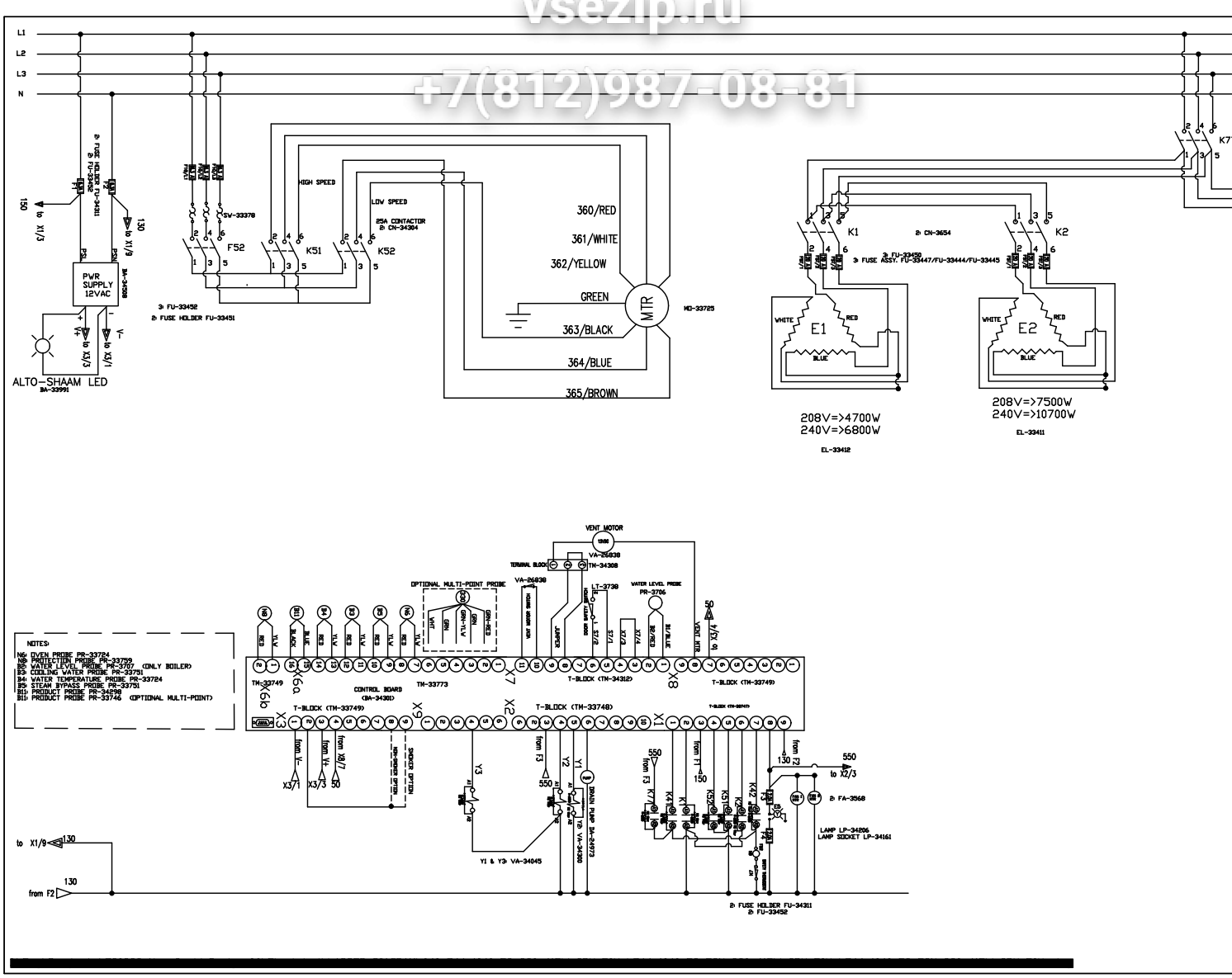

Зип Общепит
vs3z0.ru
+7(812)987-03-81

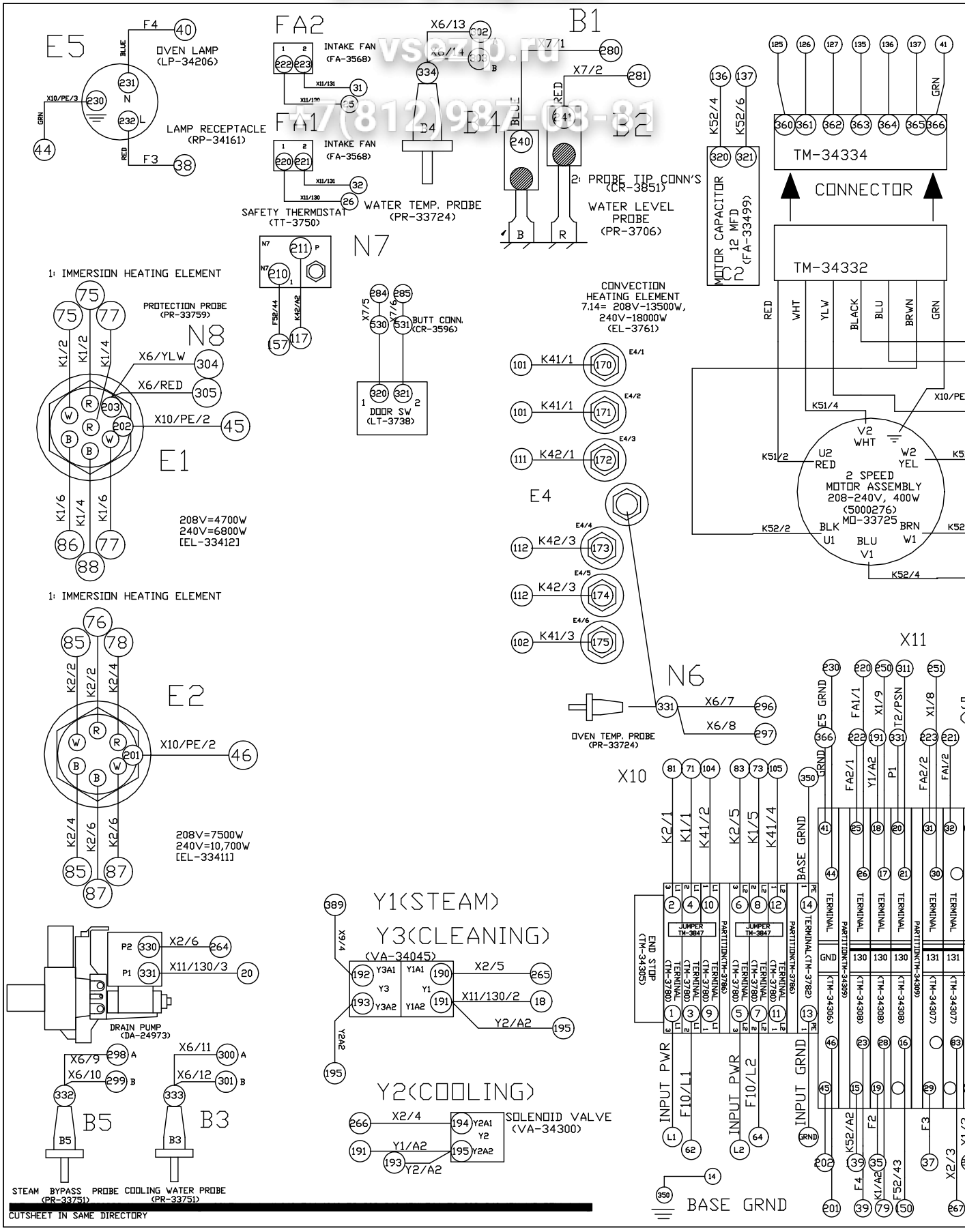

Зип Общепит
vsezip.ru
+7(812)987-08-81

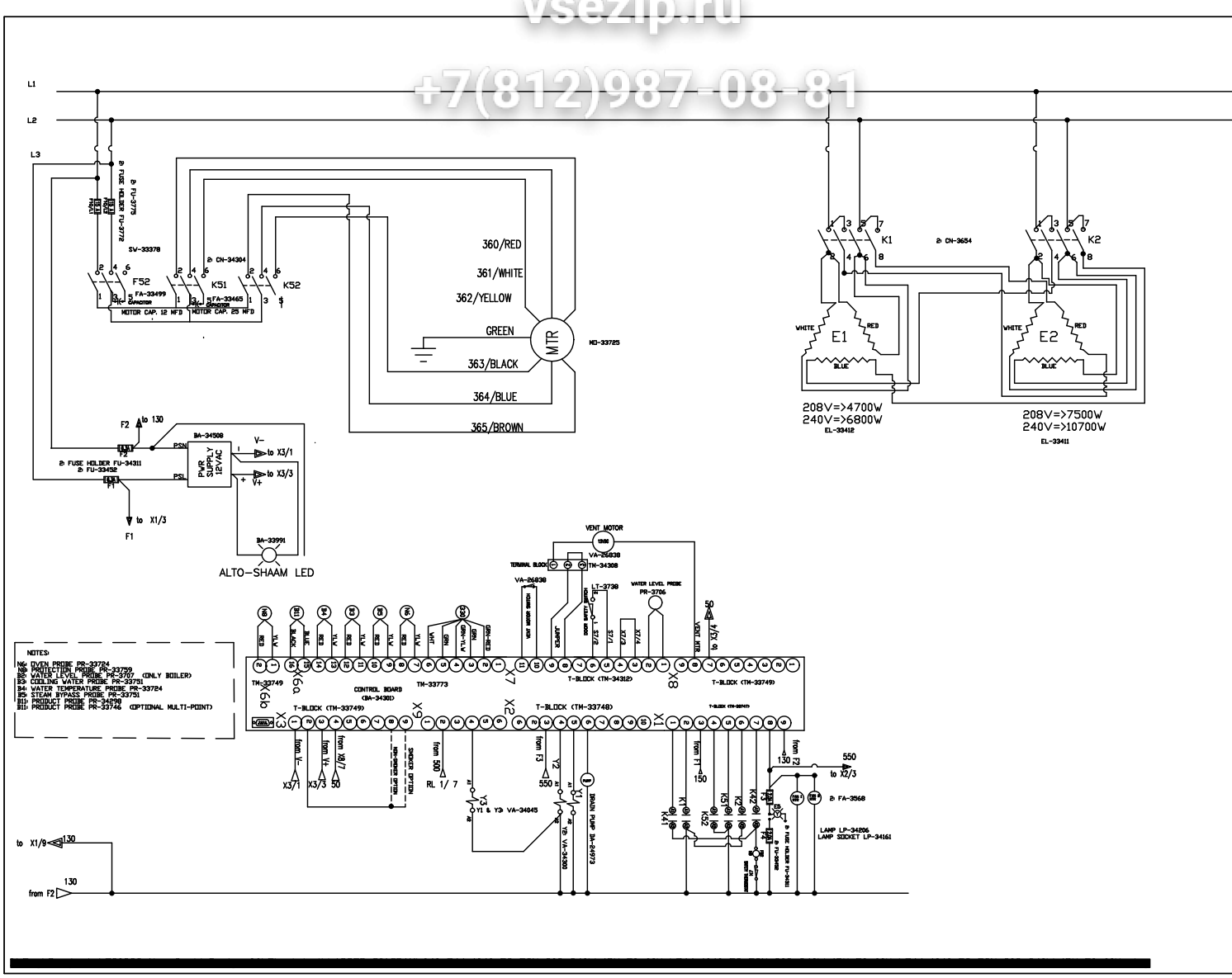

Электроцентр
vsezip.ru
+7(812)987-08-81

NOTES

Зип Общепит
vsezip.ru
+7(812)987-08-81

SECTION CONTENTS

Technical Data 204

Parts Information 205
- Door Assembly 205
- Recessed Door Assembly 206
- Directional Panel Assembly 207
- Pressure Box Assembly 208

Wiring and Ladder Diagrams 209
- 208-240V 3PH 50/60 Hz Wiring 209
- 208-240V 3PH 50/60 Hz Ladder 210
- 440-480V 3PH 50/60 Hz Wiring 211
- 440-480V 3PH 50/60 Hz Ladder 212
- 380-415V 3PH 50 Hz Wiring 213
- 380-415V 3PH 50 Hz Ladder 214
- 208-240V 1PH 50/60 Hz Wiring 215
- 208-240V 1PH 50/60 Hz Ladder 216

Return to Main Table of Contents 3

Зип Общепит
vsezip.ru
+7(812)987-08-81

ALTO SHAAM COMBITHERM

7•14 ESi SPECIFICATIONS

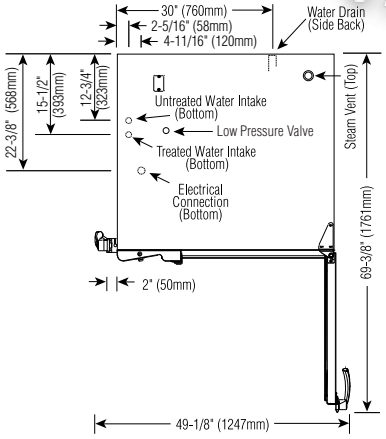

TOP VIEW

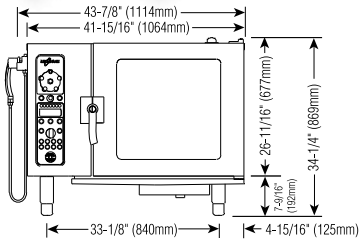

FRONT VIEW

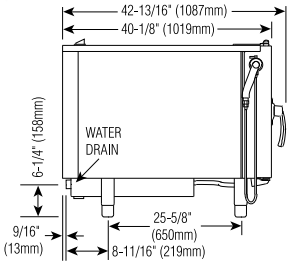

SIDE VIEW

INSTALLATION REQUIREMENTS

Oven must be installed level.
Hood installation is required.
Water supply shut-off valve and back-flow preventer.

DIMENSIONS: H x W x D

EXTERIOR:
34-1/4" x 43-7/8" x 42-13/16" (869mm x 1114mm x 1087mm)

EXTERIOR WITH RETRACTABLE DOOR:
34-1/4" x 47-7/8" x 42-13/16" (869mm x 1216mm x 1087mm)

INTERIOR:
20-5/16" x 23-1/2" x 28-7/16" (515mm x 596mm x 722mm)

WATER REQUIREMENTS

TWO (2) COLD WATER INLETS - DRINKING QUALITY

ONE (1) TREATED WATER INLET:	3/4" NPT*	
ONE (1) UNTREATED WATER INLET:	3/4" NPT*	
LINE PRESSURE:	30 to 90 psi	2.8 to 6.2 bar

WATER DRAIN: 1-1/2" CONNECTION WITH AIR GAP

* Can manifold off of one 3/4" line.

WATER QUALITY MINIMUM STANDARDS

USING A WATER SUPPLY NOT MEETING ALTO-SHAAM'S MINIMUM WATER QUALITY STANDARDS WILL VOID THIS WARRANTY. It is the responsibility of the purchaser to ensure that incoming water supply is compliant with the specifications listed through adequate treatment measures. Installation of the CombiGuard™ Water Filtration System is recommended, but this system may not address all water quality issues present.

Contaminant	Inlet Water Requirements (untreated water)
Free Chlorine	Less than 0.1 ppm (mg/L)
Hardness	Less than 3 gpg (52 ppm)
Chloride	Less than 30 ppm (mg/L)
pH	7.0 to 8.5
Alkalinity	Less than 50 ppm (mg/L)
Silica	Less than 12 ppm (mg/L)
Total Dissolved Solids (tds)	Less than 60 ppm

CLEARANCE REQUIREMENTS

LEFT: 6" (152mm) PLUS SERVICE ACCESS: 18" (457mm) RECOMMENDED
20" (508mm) FROM HEAT PRODUCING EQUIPMENT

RIGHT: 4" (102mm) TOP: 20" (508mm) FOR AIR MOVEMENT

BACK: 4" (102mm) BOTTOM: 5-1/8" (130mm) FOR LEGS

COUNTER-TOP INSTALLATIONS MUST MAINTAIN 4" (102mm) MINIMUM CLEARANCE FROM COUNTER SURFACE.

ELECTRICAL

	VOLTAGE	PHASE	CYCLE/HZ	AWG	7•14ESi AMPS	7•14ESi kW	7•14ESi/sk AMPS	7•14ESi/sk kW
208-240	at 208	1*	50/60	2 Wire plus ground	67.0	13.9	69.2	14.4
	at 240			AWG 3	77.0	18.4	79.0	18.9
208-240	at 208	3	50/60	3 Wire plus ground	38.6/ph	13.9	40.0/ph	14.4
	at 240			AWG 6	44.3/ph	18.4	45.5/ph	18.9
380-415	at 380	3	50/60	4 Wire plus ground	21.1/ph	13.9	22.0/ph	14.4
	at 415			AWG 10	25.6/ph	18.4	26.3/ph	18.9
440-480	at 440	3*	50/60	3 Wire plus ground	20.0/ph	15.4	21.0/ph	15.9
	at 480			AWG 8	22.0/ph	18.4	23.0/ph	18.9

* ELECTRICAL SERVICE CHARGE APPLIES

WEIGHT

NET	436 lb	(198 kg)
SHIP	560 lb	(254 kg)
CRATE	42" x 50" x 46" EST.	
DIMENSIONS:	(1067 x 1270 x 1168mm)	

CAPACITY

		7•14ESi	7•14ESi/sk
FULL-SIZE PANS:	20" x 12" x 2-1/2"	Fourteen (14)	Twelve (12)
GN 1/1:	530 x 325 x 65mm	Fourteen (14)	Twelve (12)
GN 2/1:	650 x 530 x 65mm	Seven (7)	Five (5)
FULL-SIZE SHEET PANS:* ON WIRE SHELVES ONLY	18" x 26" x 1"	Seven (7)	Six (6)

168 lb (76 kg) MAXIMUM

VOLUME MAXIMUM: 105 QUARTS (133 LITERS)

*ADDITIONAL WIRE SHELVES REQUIRED FOR MAXIMUM CAPACITY

ELECTRIC COMBITHERM — INSTALLATION MANUAL #7001

ЗипОбщепит
vsezip.ru
+7(812)987-08-81

DOOR ASSEMBLY

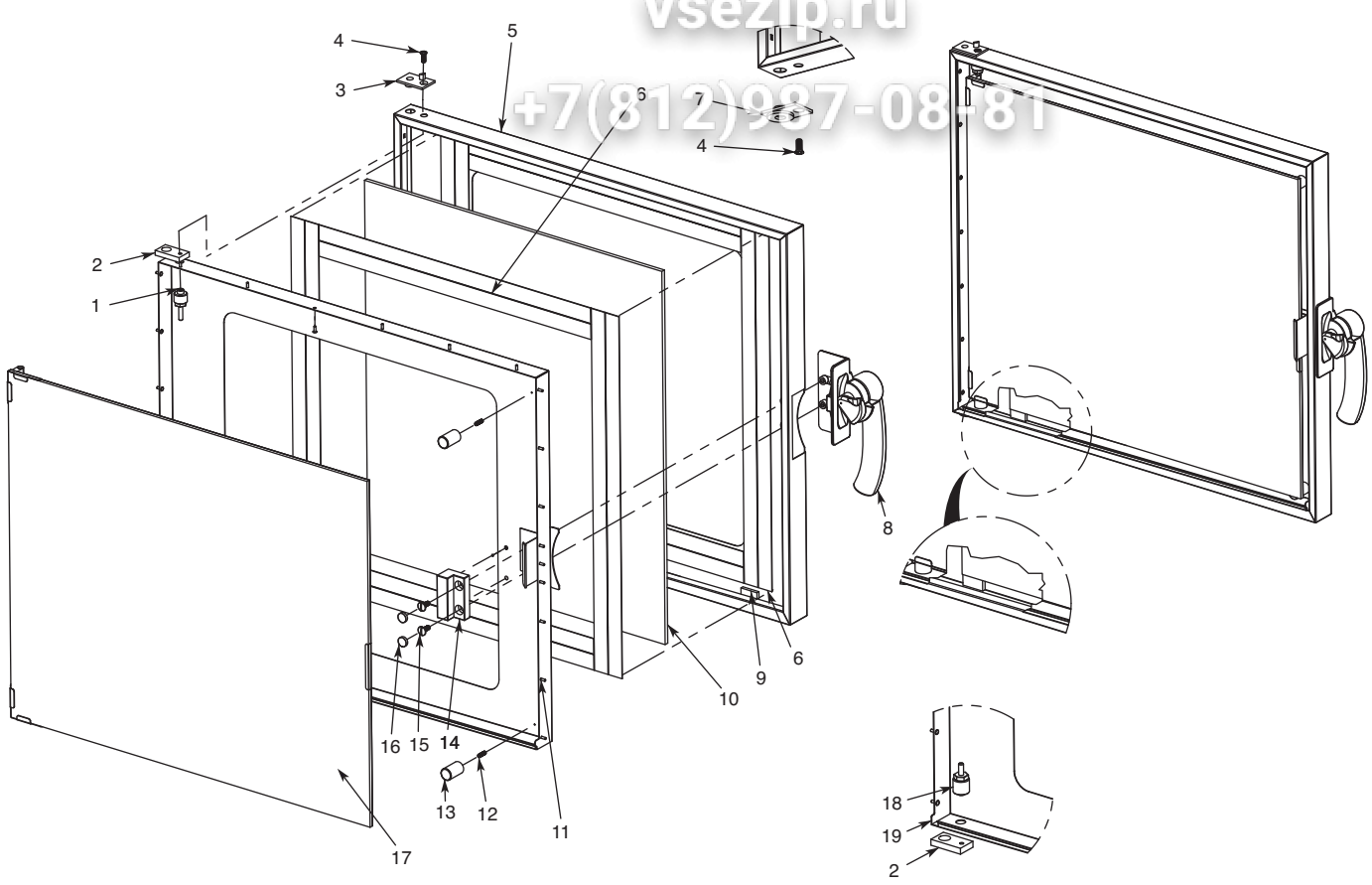

Hinge Pin Detail

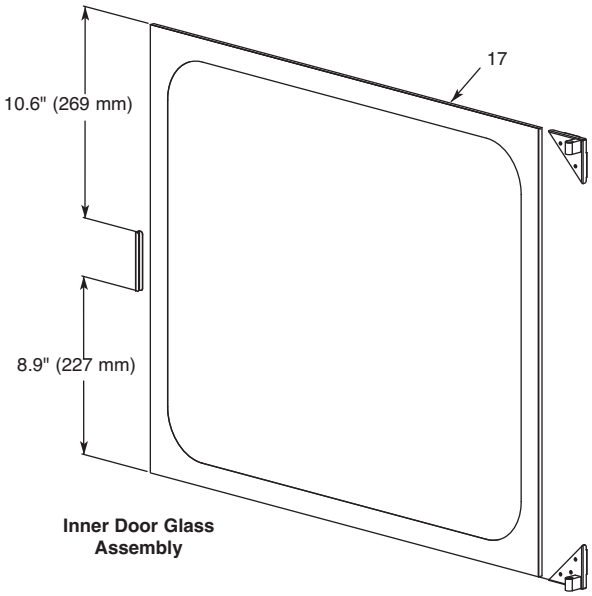

Inner Door Glass Assembly

Item	Part	Description	Qty.
1	PI-26973	Pin, Upper	1
2	HG-25078	Hinge, CT, Anchor, ML Combis	2
3	HG-25077	Hinge, CT, Top Stop, ML Combi	1
4	SC-22282	Screw, CT, 1.0X 16 mm, PH Oval, HD N/S 18-8, DIN # 966A	2
5	1005957	Outer Panel, Door	1
6	TA-25125	Tape, Double Sided	2
7	HG-25079	Hinge, CT, Upper Ratchet, Combi	1
8	HD-26966	Handle, Door, Right, Combi '06	1
9	BM-27116	Bumper	2
10	GL-27110	Glass, Outer Door, 7.14 EP	1
11	RI-27108	Rivet, Sealed	22
12	SC-25091	Screw, CT, M5X16, DIN 551, A2 S/S, SLTD Set Screw Flat PT	2
13	BM-27146	Bumper Stop/Inner Door	2
14	SP-27212	Spacer, Window Latch	1
15	SC-27125	Screw, Truss Head, S/S	2
16	PG-24789	Plug, 15 mm	2
17	5005090	Inner Door, Glass Assembly	1
18	PI-26974	Pin, Lower	1
19	5005089	Inner Door Spot RH	1
*	CL-27854	Inner Door Latch	1

*Item Not Shown

ЗиПОбщепит
vsezip.ru
+7(812)987-08-81

RECESSED DOOR ASSEMBLY

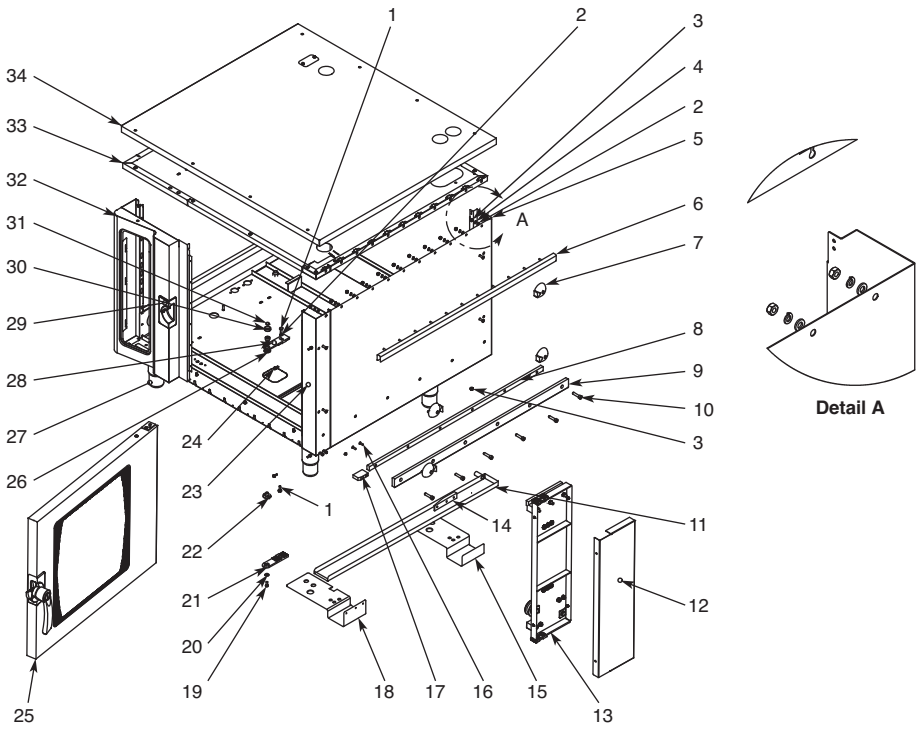

Item	Part	Description	Qty.
1	SC-22924	M6 x 20 Hex Trim HD	2
2	WS-22297	Washer, Flat, M6, DIN 125	14
3	NU-22291	M6-1.0 x Hex S/S Nut 18-8	12
4	WS-22302	Washer, Lock, M6, DIN 127B	12
5	5008015	Right Side Assembly	1
6	5007897	Channel Assembly	1
7	BK-27412	Recessed Door Block	4
8	RA-28207	Rail, Top	1
9	RA-28208	Rail, Bottom	1
10	SC-24388	Screw, SHC M8 x 35 S/S	6
11	5007893	Drip Pan Assembly	1
12	1008869	Cover, Trolley	1
13	5008001	Trolley Assembly	1
14	BK-22100	White Teflon, Cart Guide Block	1
15	1008505	Rear Bracket, Recessed	1
16	SC-22281	Screw, M5 x 16 Flat Head CSink	2
17	BK-28252	Block, Guide	1

Item	Part	Description	Qty.
18	1008506	Front Bracket Recessed	1
19	SC-22284	Screw, M6 x 16 Hex S/S HD	1
20	WS-22298	Washer, M8, 18-8	1
21	HG-28040	Hinge	1
22	HG-25101	Hinge, Lower Ratchet	1
23	5008014	Front Corner Assembly	1
24	SC-26060	M5 x 16 Hex Head	4
25	5008004	Door Assembly Recessed	1
26	WS-25124	Eccesntric Washer	1
27	LG-26867	Legs, Combi	4
28	HG-28041	Hinge	1
29	LT-26968	Latch, Door, Right	1
30	WS-25127	Covering Washer, For Hinge	1
31	PG-25132	M12, (Black or Natural)	1
32	PE-27559	Front Panel Weld Assembly	1
33	5005065	Fill In Cover Assembly	1
34	5007895	Outer Cover Assembly	1

ЗипРазбор
vsezip.ru
+7(812)987-08-81

DIRECTIONAL PANEL ASSEMBLY

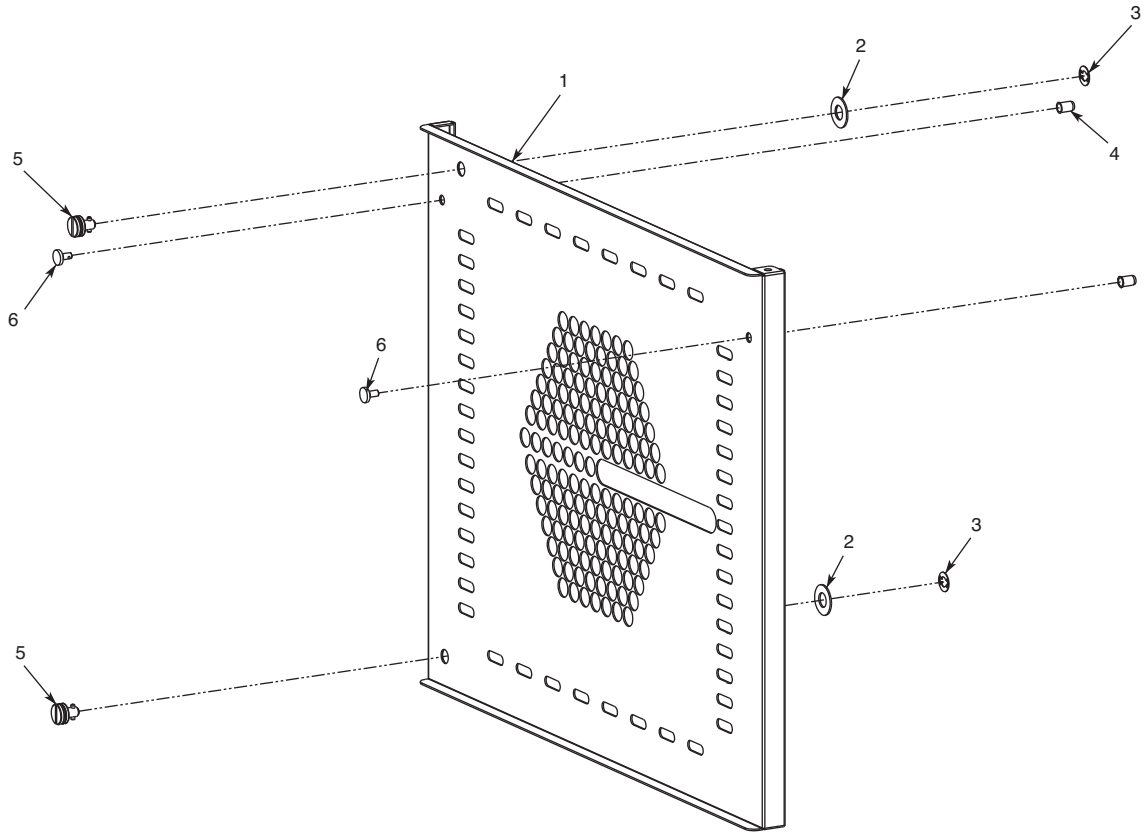

Item	Part	Description	Qty.
1	1006361	Directional Panel, 7.14 I	1
2	1006601	Directional Panel Spacer, 16 GA	2
3	WS-24090	Holding (Lock Clip), All Combitherm's ML	2
4	NU-22770	Nut, Threaded Insert, M6	2
5	CL-24089	Clip, CT, ML, Lock, W/3 Washers	2
6	SC-22753	Screw, SS Round, Hanging Rack	2

ЗиПОбщепит
vsezip.ru
+7(812)987-08-81

PRESSURE BOX ASSEMBLY

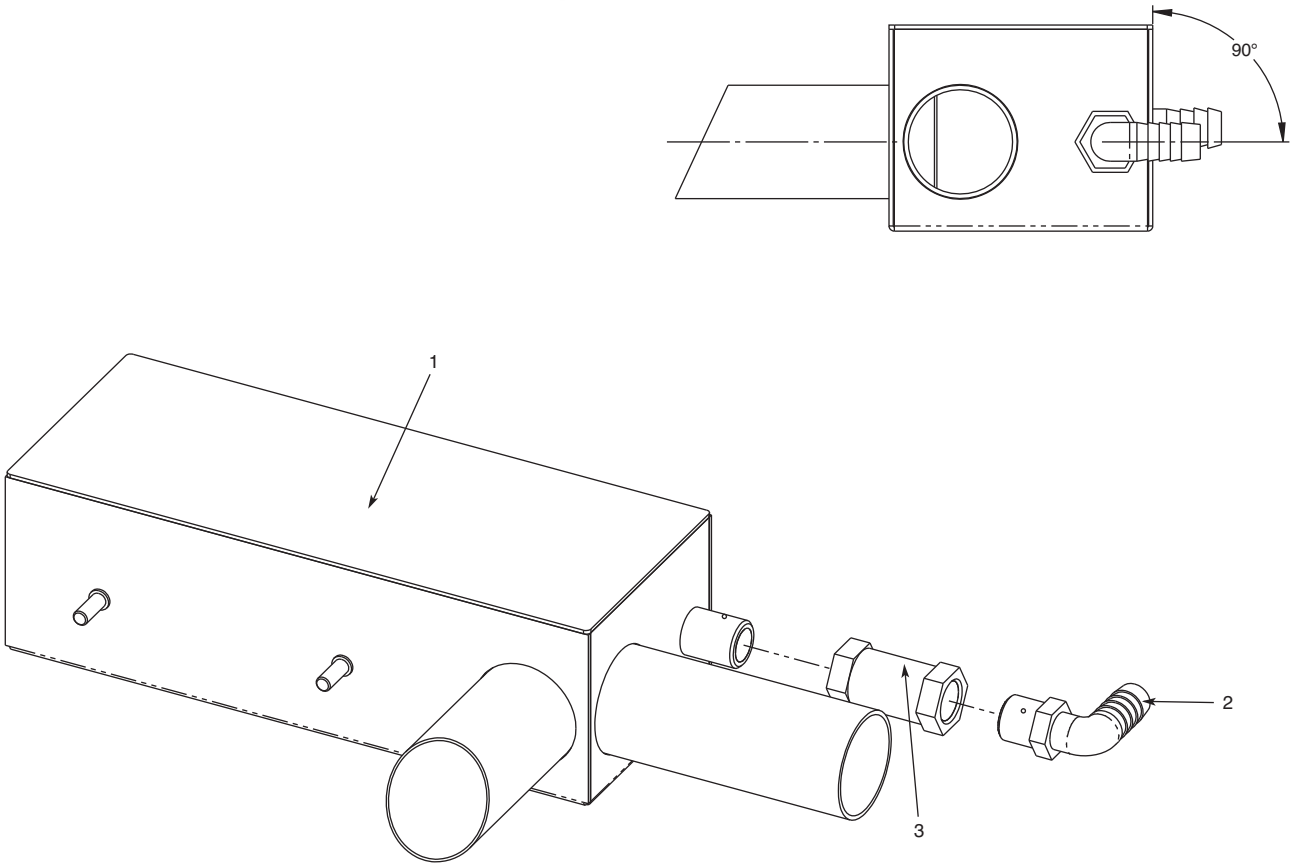

Item	Part	Description	Qty.
1	5005009	Pressure Box	1
2	EB-25551	Elbow, Nylon, 1/2" x 3/8"	1
3	VA-25549	Valve, 3/8", Flow Control, 0.12 GPM	1

Зип Общепит
vsezip.ru
+7(812)987-08-81

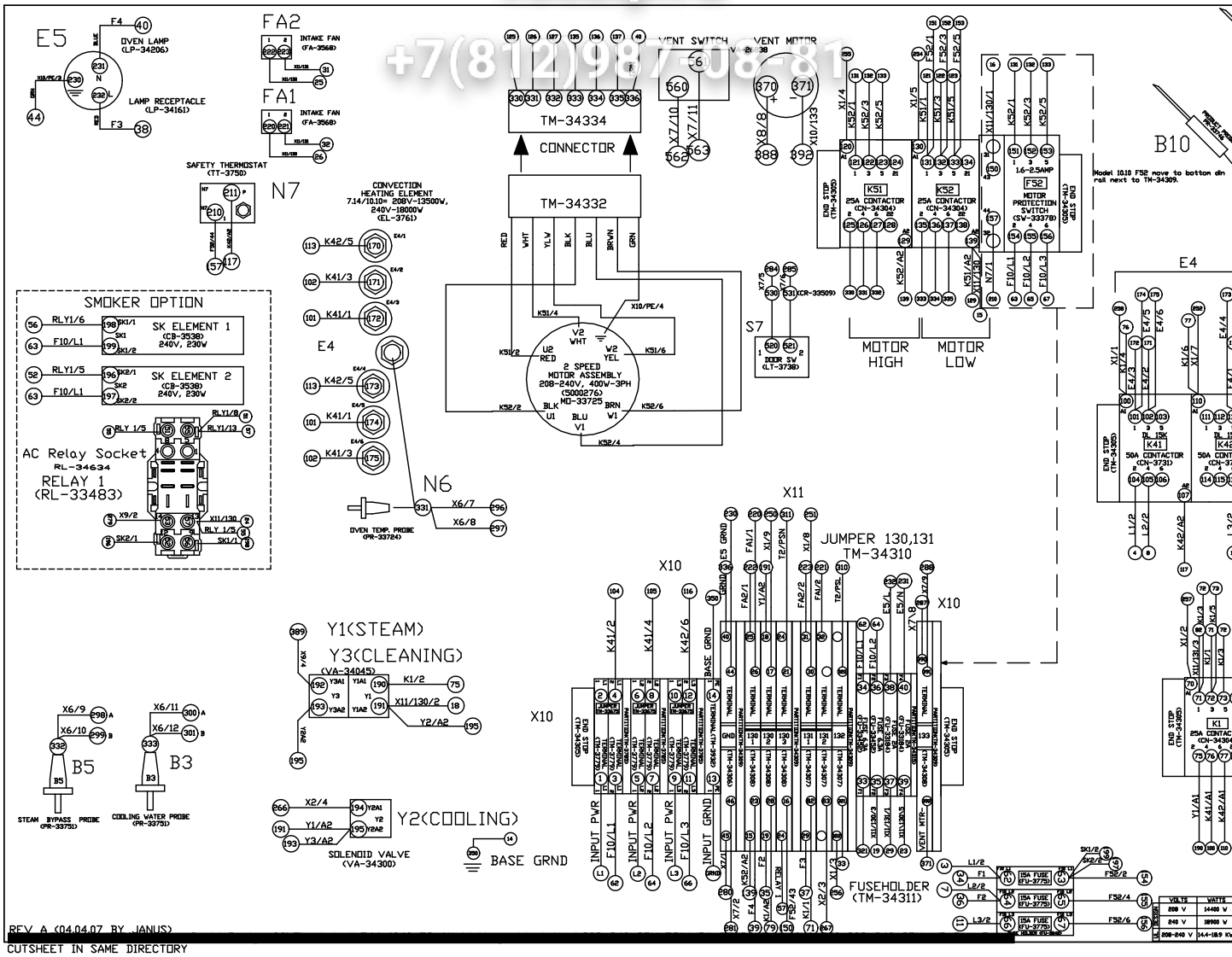

REV A (04.04.07 BY JANUS)
CUTSHEET IN SAME DIRECTORY

Зип Общепит
vsezip.ru
+7(812)987-08-81

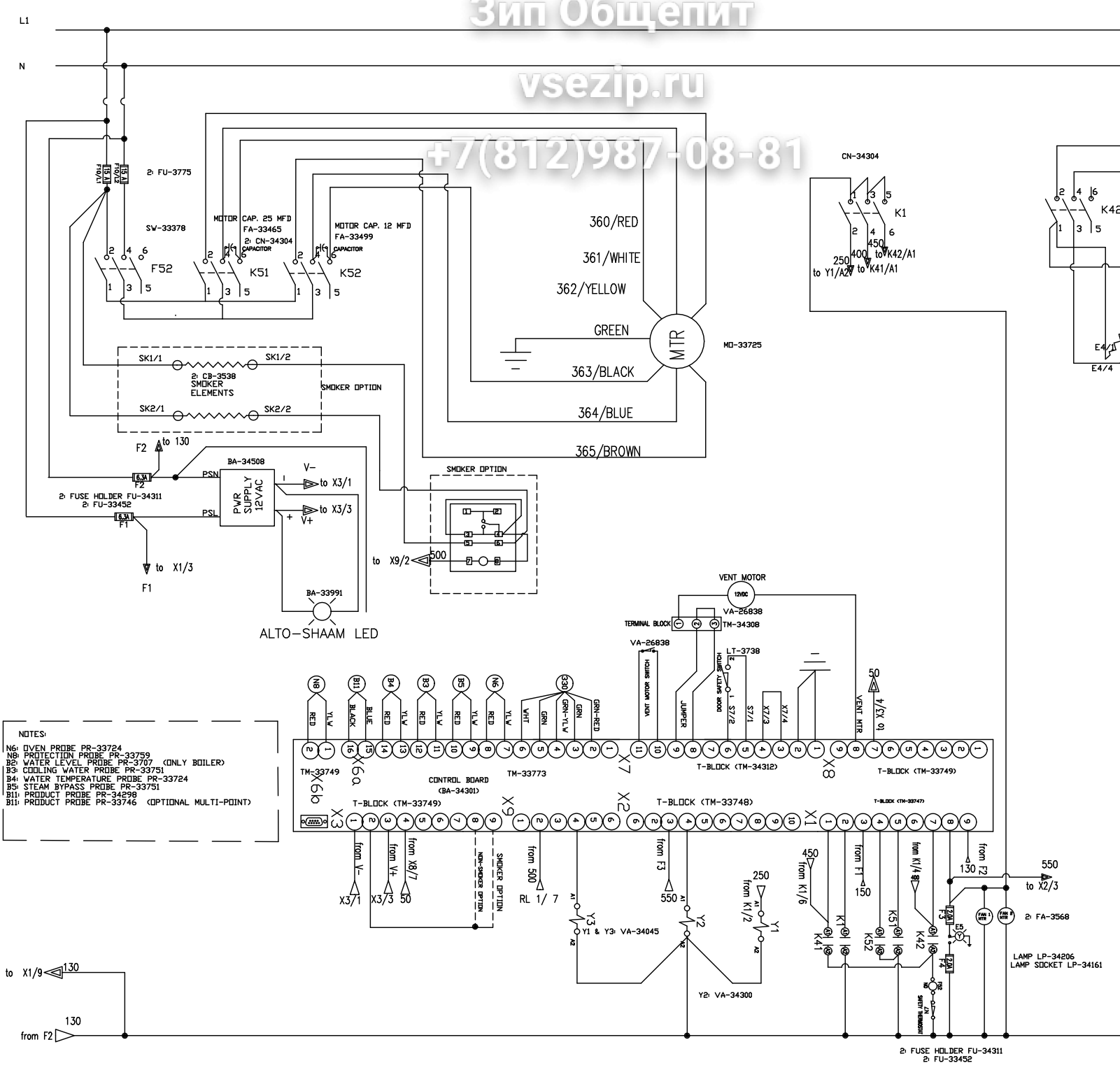

NOTES:
N6: OVEN PROBE PR-33724
N8: PROTECTION PROBE PR-33759
B2: WATER LEVEL PROBE PR-3707 (ONLY BOILER)
B3: COOLING WATER PROBE PR-33751
B4: WATER TEMPERATURE PROBE PR-33724
B5: STEAM BYPASS PROBE PR-33751
B11: PRODUCT PROBE PR-34298
B11: PRODUCT PROBE PR-33746 (OPTIONAL MULTI-POINT)

Зип Общепит
vsezip.ru
+7(812)987-08-81

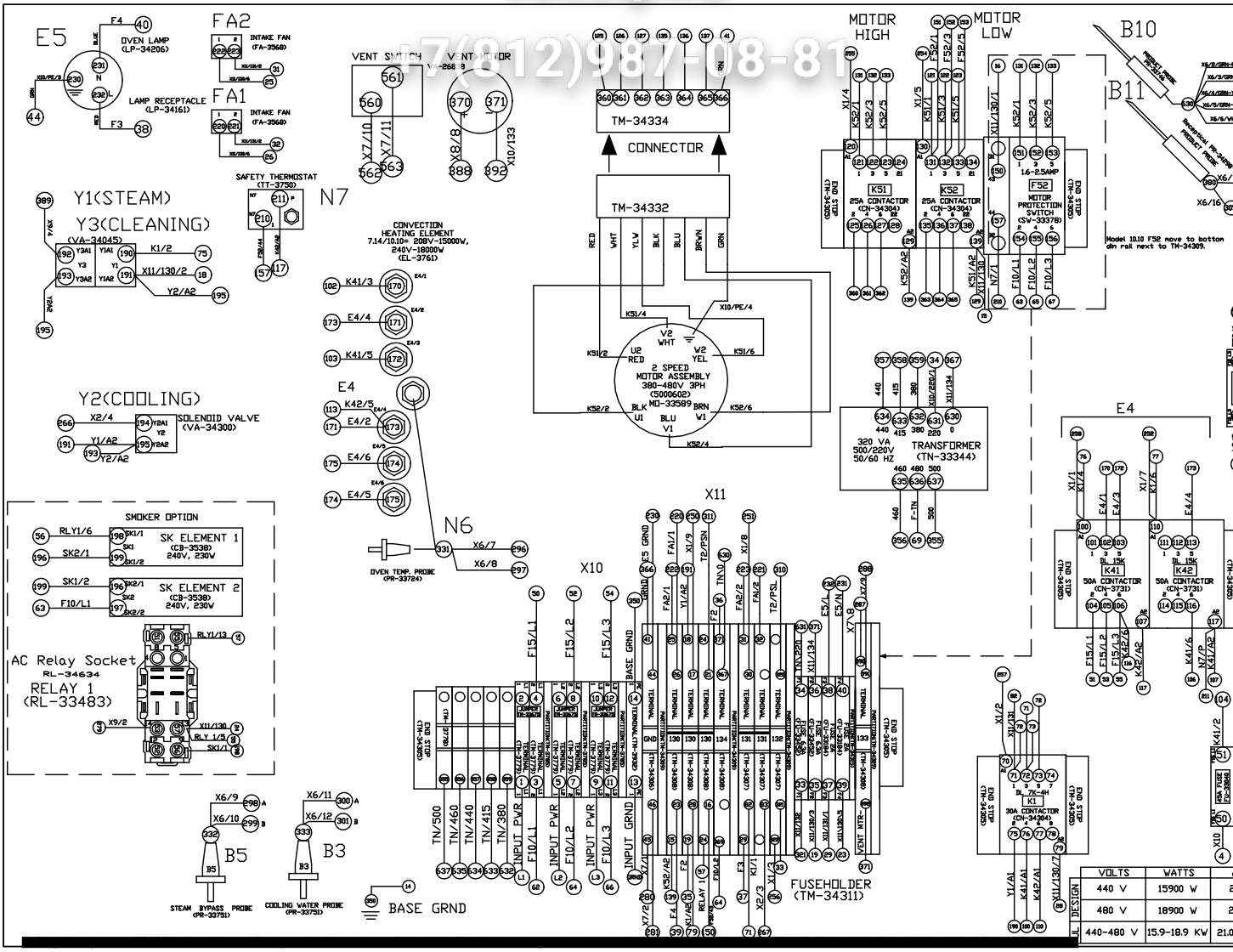

Зип Общепит
vsezip.ru
+7(812)987-08-81

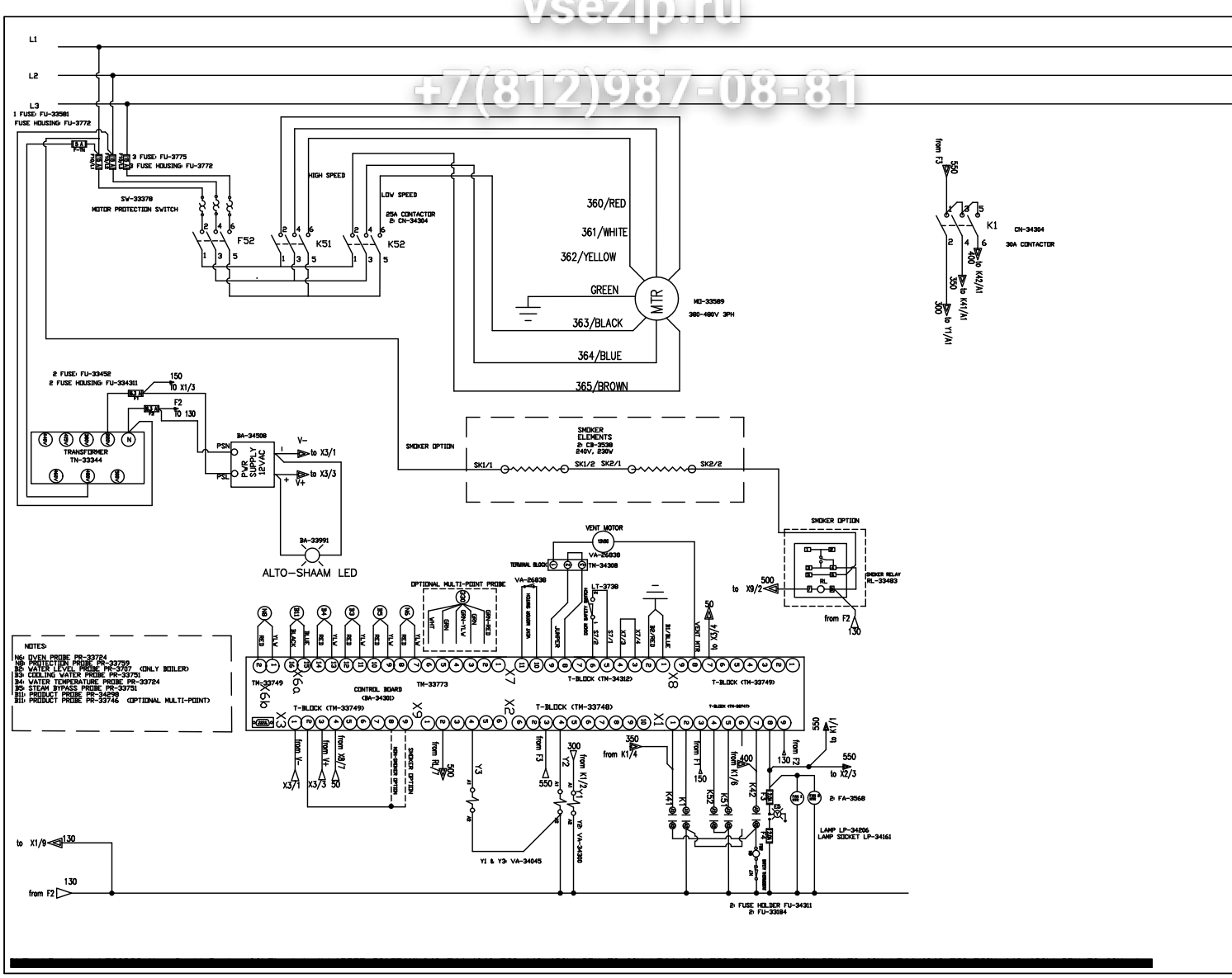

Зип Общепит
vsezip.ru
+7(812)987-08-81

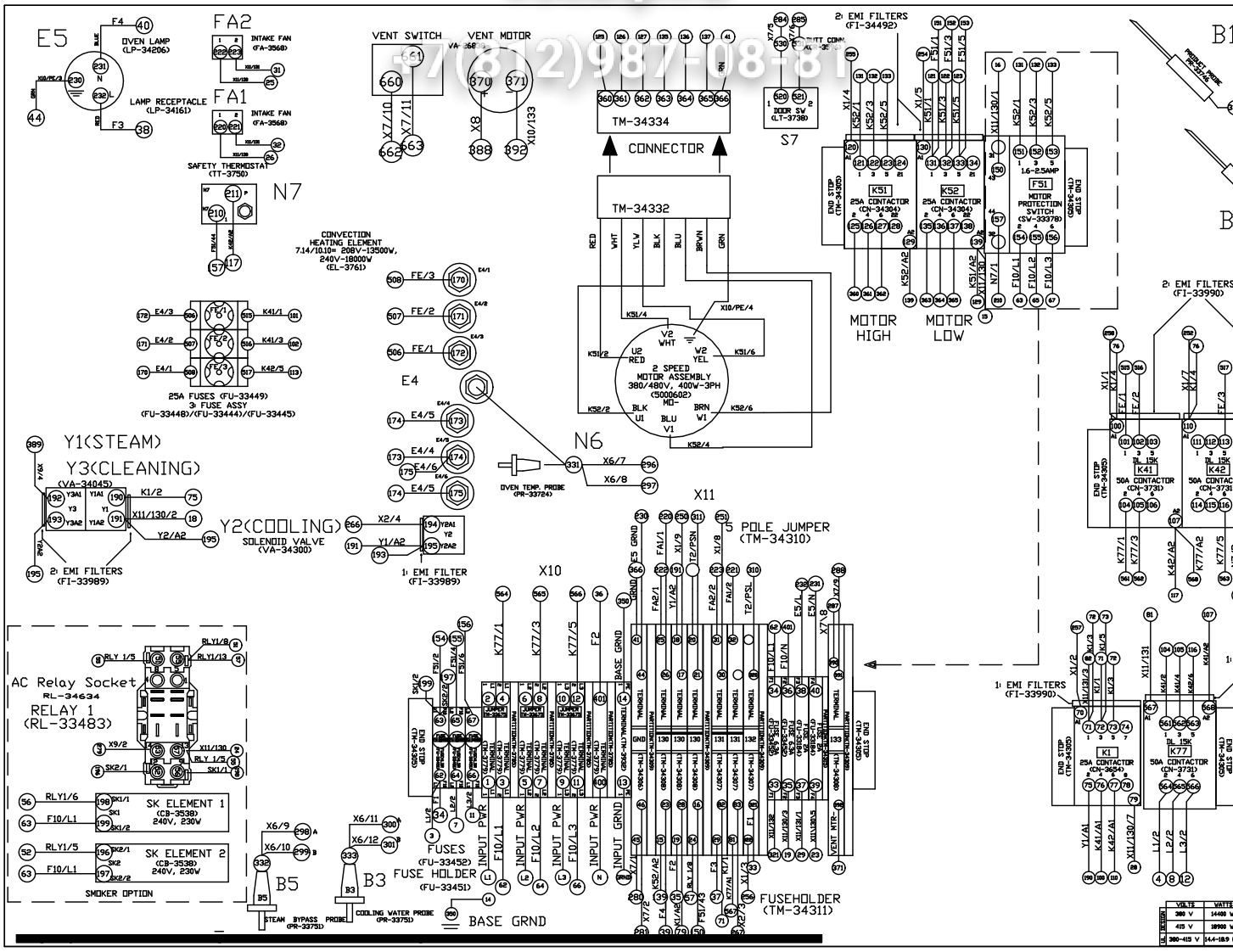

Зип Общепит
vsezip.ru
+7(812)987-08-81

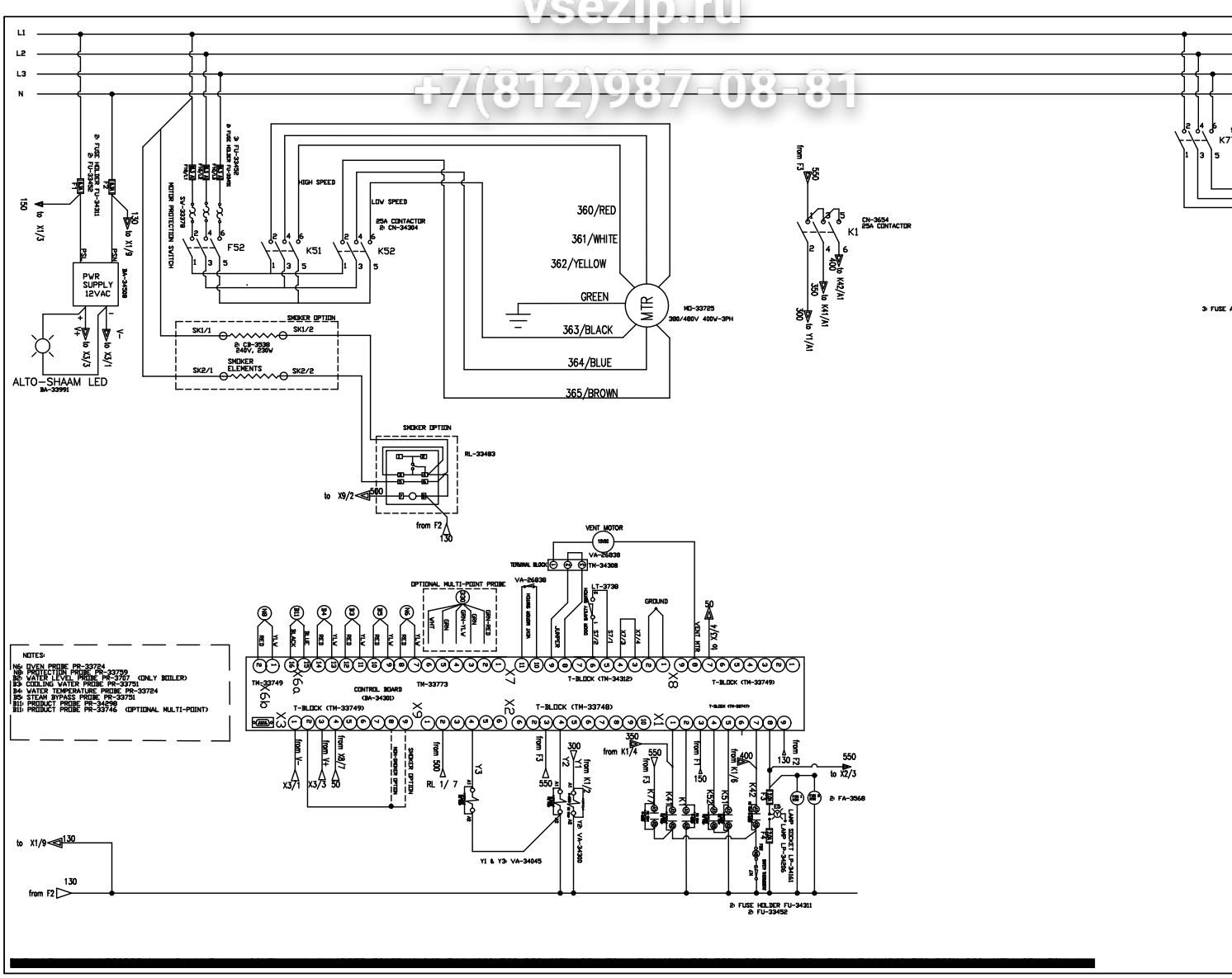

Зип Общепит
vsezip.ru
+7(812)987-08-81

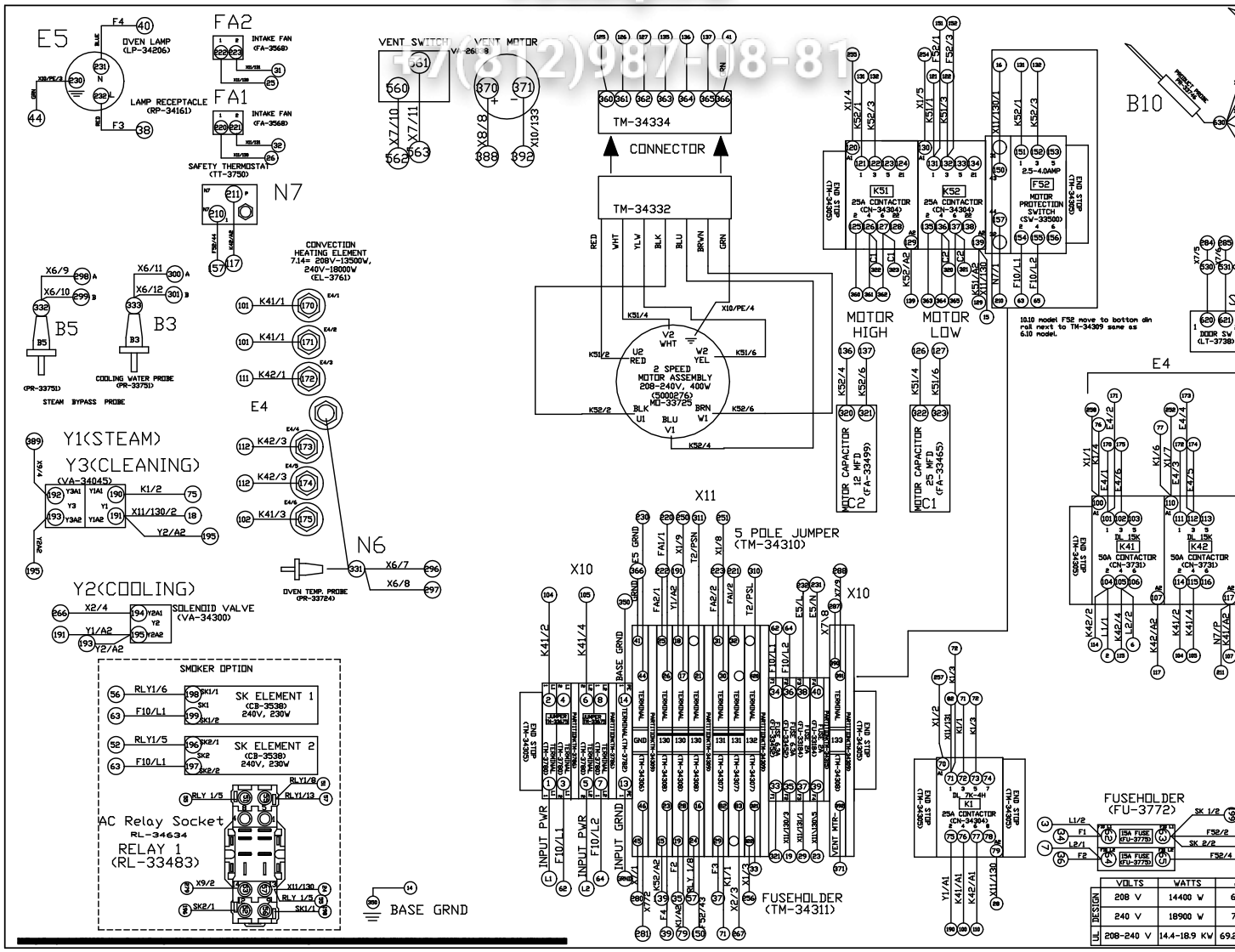

Зип Общепит
vsezip.ru
+7(812)987-08-81

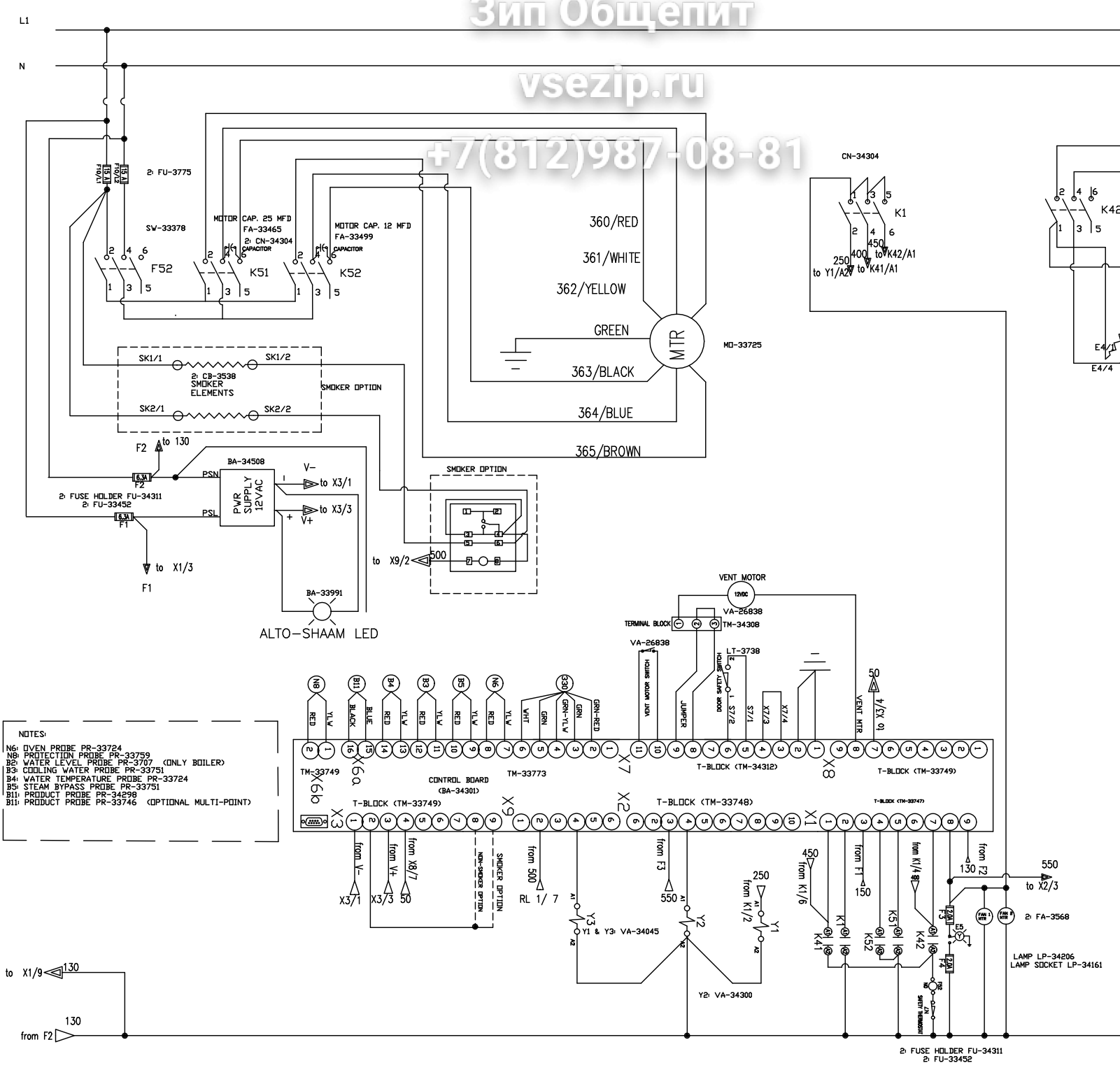

NOTES:
N6: OVEN PROBE PR-33724
N8: PROTECTION PROBE PR-33759
B2: WATER LEVEL PROBE PR-3707 (ONLY BOILER)
B3: COOLING WATER PROBE PR-33751
B4: WATER TEMPERATURE PROBE PR-33724
B5: STEAM BYPASS PROBE PR-33751
B11: PRODUCT PROBE PR-34298
B11: PRODUCT PROBE PR-33746 (OPTIONAL MULTI-POINT)

Зип Общепит
vsezip.ru
+7(812)987-08-81

SECTION CONTENTS

Technical Data 218

Parts Information 219
- Door Assembly 219
- Recessed Door Assembly 220
- Directional Panel Assembly 221
- Steam Generator Assembly 222

Wiring and Ladder Diagrams 223
- 208-240V 3PH 50/60 Hz Wiring 223
- 208-240V 3PH 50/60 Hz Ladder 224
- 440-480V 3PH 50/60 Hz Wiring 225
- 440-480V 3PH 50/60 Hz Ladder 226
- 380-415V 3PH 50 Hz Wiring 227
- 380-415V 3PH 50 Hz Ladder 228

Return to Main Table of Contents 3

Зип Общепит
vsezip.ru
+7(812)987-08-81

10•18ES SPECIFICATIONS

ALTO SHAAM COMBITHERM

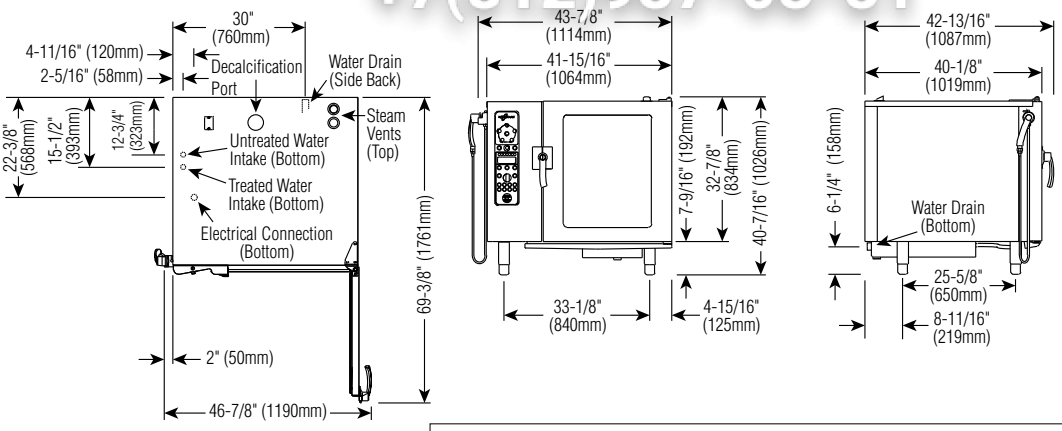

DIMENSIONS: H x W x D

EXTERIOR:
40-7/16" x 43-7/8" x 42-13/16" (1026mm x 1114mm x 1087mm)

EXTERIOR WITH RETRACTABLE DOOR:
40-7/16" x 47-7/8" x 42-13/16" (1026mm x 1216mm x 1087mm)

INTERIOR:
30-3/4" x 23-1/2" x 28-7/16" (781mm x 596mm x 722mm)

INSTALLATION REQUIREMENTS

Oven must be installed level.
Hood installation is required.
Water supply shut-off valve and back-flow preventer.

WATER REQUIREMENTS

TWO (2) COLD WATER INLETS - DRINKING QUALITY

ONE (1) TREATED WATER INLET:	3/4" NPT*	
ONE (1) UNTREATED WATER INLET:	3/4" NPT*	
LINE PRESSURE:	30 to 90 psi	2.8 to 6.2 bar

WATER DRAIN: 1-1/2" CONNECTION WITH AIR GAP

* Can manifold off of one 3/4" line.

WATER QUALITY MINIMUM STANDARDS

USING A WATER SUPPLY NOT MEETING ALTO-SHAAM'S MINIMUM WATER QUALITY STANDARDS WILL VOID THIS WARRANTY. It is the responsibility of the purchaser to ensure that incoming water supply is compliant with the specifications listed through adequate treatment measures. Installation of the CombiGuard™ Water Filtration System is recommended, but this system may not address all water quality issues present.

Contaminant	Inlet Water Requirements (untreated water)
Free Chlorine	Less than 0.1 ppm (mg/L)
Hardness	Less than 3 gpg (52 ppm)
Chloride	Less than 30 ppm (mg/L)
pH	7.0 to 8.5
Alkalinity	Less than 50 ppm (mg/L)
Silica	Less than 12 ppm (mg/L)
Total Dissolved Solids (tds)	Less than 60 ppm

CLEARANCE REQUIREMENTS

LEFT: 6" (152mm) PLUS SERVICE ACCESS: 18" (457mm) RECOMMENDED
20" (508mm) FROM HEAT PRODUCING EQUIPMENT
RIGHT: 4" (102mm) TOP: 20" (508mm) FOR AIR MOVEMENT
BACK: 4" (102mm) BOTTOM: 5-1/8" (130mm) FOR LEGS

COUNTER-TOP INSTALLATIONS MUST MAINTAIN 4" (102mm) MINIMUM CLEARANCE FROM COUNTER SURFACE.

ELECTRICAL

	VOLTAGE	PHASE	CYCLE/HZ	AWG	AMPS	kW
208-240	at 208	3	50/60	3 Wire plus ground	61.3/ph	22.0
	at 240			AWG 2	70.0/ph	29.2
380-415	at 380	3	50/60	4 Wire plus ground	33.5/ph	22.0
	at 415			AWG 6	40.7/ph	29.2
440-480	at 440	3*	50/60	3 Wire plus ground	36.0/ph	27.2
	at 480			AWG 6	43.5/ph	36.1

* ELECTRICAL SERVICE CHARGE APPLIES

WEIGHT

NET	522 lb	(237 kg)
SHIP	646 lb	(293 kg)
CRATE	46" x 51" x 46" EST.	
DIMENSIONS:	(1168 x 1295 x 1168mm)	

CAPACITY

FULL-SIZE PANS:	20" x 12" x 2-1/2"	Twenty (20)
GN 1/1:	530 x 325 x 65mm	Twenty (20)
GN 2/1:	650 x 530 x 65mm	Ten (10)
FULL-SIZE SHEET PANS:* ON WIRE SHELVES ONLY	18" x 26" x 1"	Ten (10)

240 lb (109 kg) MAXIMUM

VOLUME MAXIMUM: 150 QUARTS (190 LITERS)

*ADDITIONAL WIRE SHELVES REQUIRED FOR MAXIMUM CAPACITY

ELECTRIC COMBITHERM — INSTALLATION MANUAL #7001

ЗипОбщепит
vsezip.ru
+7(812)987-08-81

DOOR ASSEMBLY

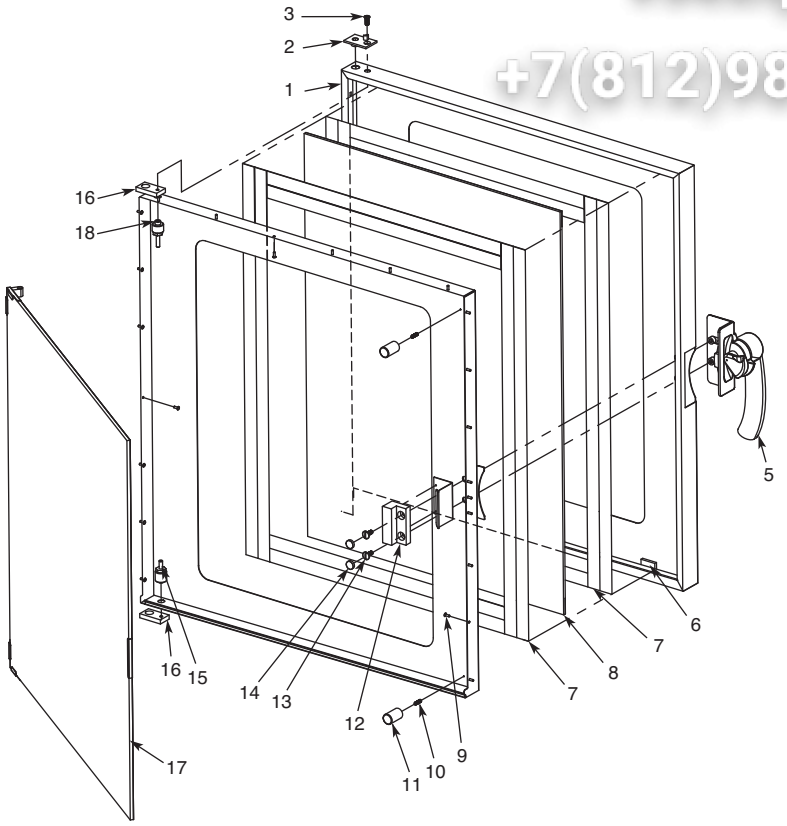

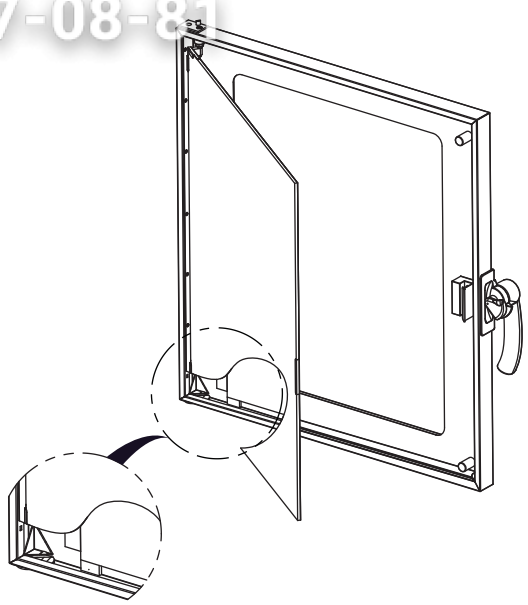

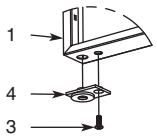

Hinge Detail

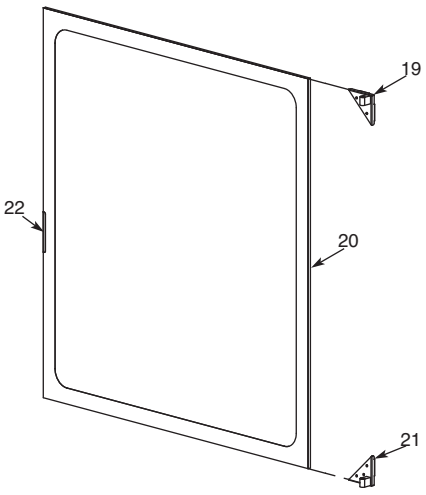

Item	Part	Description	Qty.
1	1006880	Outer Panel, Door 10.10	1
2	HG-25077	Hinge, CT, Top Stop, ML Combi	1
3	SC-22282	Screw, CT, 1.0 x 16 mm, Ph Oval, Hd N/S 18-8, DIN #966A	2
4	HG-25079	Hinge, CT, Upper Ratchet, Combi	1
5	HD-26966	Handle, Door, Right, Combi '06	1
6	BM-27116	Bumper	2
7	TA-25125	Tape, Double Sided	2
8	GL-27224	Glass, Outer Door, 10.10/10.18ep	1
9	RI-27108	Rivet, Sealed	22
10	SC-25091	Screw, CT, M5 x 16, DIN 551, A2 S/S, Sltd Set Screw Flat Pt	2
11	BM-27146	Bumper Stop/Inner Door	2
12	SP-27212	Spacer, Window Latch	1
13	SC-27125	Screw, Truss Head, S/S	2
14	PG-24789	Plug, 15 mm	2
15	PI-26974	Pin, Lower	1
16	HG-25078	Hinge, CT, Anchor, ML Combis	2
17	5005560	Inner Door Glass Assembly	1
18	PI-26973	Pin, Upper	1
19	HG-27217	Lower Hinge Assembly	1
20	GL-27225	Glass, Inner	1
21	HG-27218	Upper Hinge Assembly	1
22	LT-25394	Latch, CT, ML, 7.1 ML	1

PARTS INFORMATION

Зип Общепит

RECESSED DOOR ASSEMBLY

vsezip.ru

+7(812)987-08-81

(Contact factory.)

ЗипОбщепит
vsezip.ru
+7(812)987-08-81

DIRECTIONAL PANEL ASSEMBLY

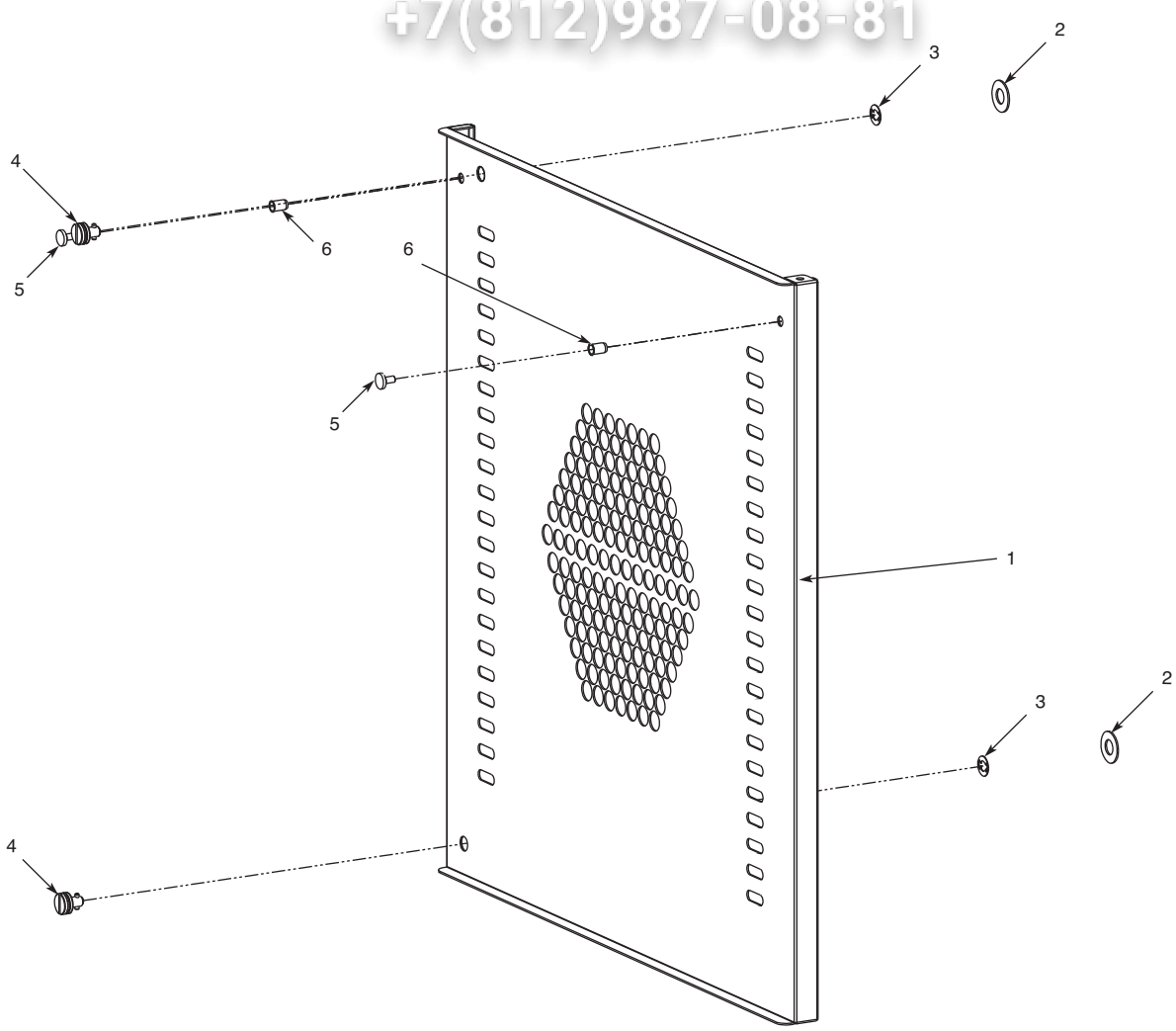

Item	Part	Description	Qty.
1	10066165	Directional Panel, 10.18 EP	1
2	1006601	Directional Panel Spacer, 16 GA	2
3	WS-24090	Holding (Lock Clip)	2
4	CL-24089	Clip, CT, ML, Lock, W/3 Washers	2
5	SC-22753	Screw, SS Round, Hanging Rack	2
6	NU-22770	Nut, Threaded Insert, M6	2

ЗиПОбщепит
vsezip.ru
+7(812)987-08-81

STEAM GENERATOR ASSEMBLY

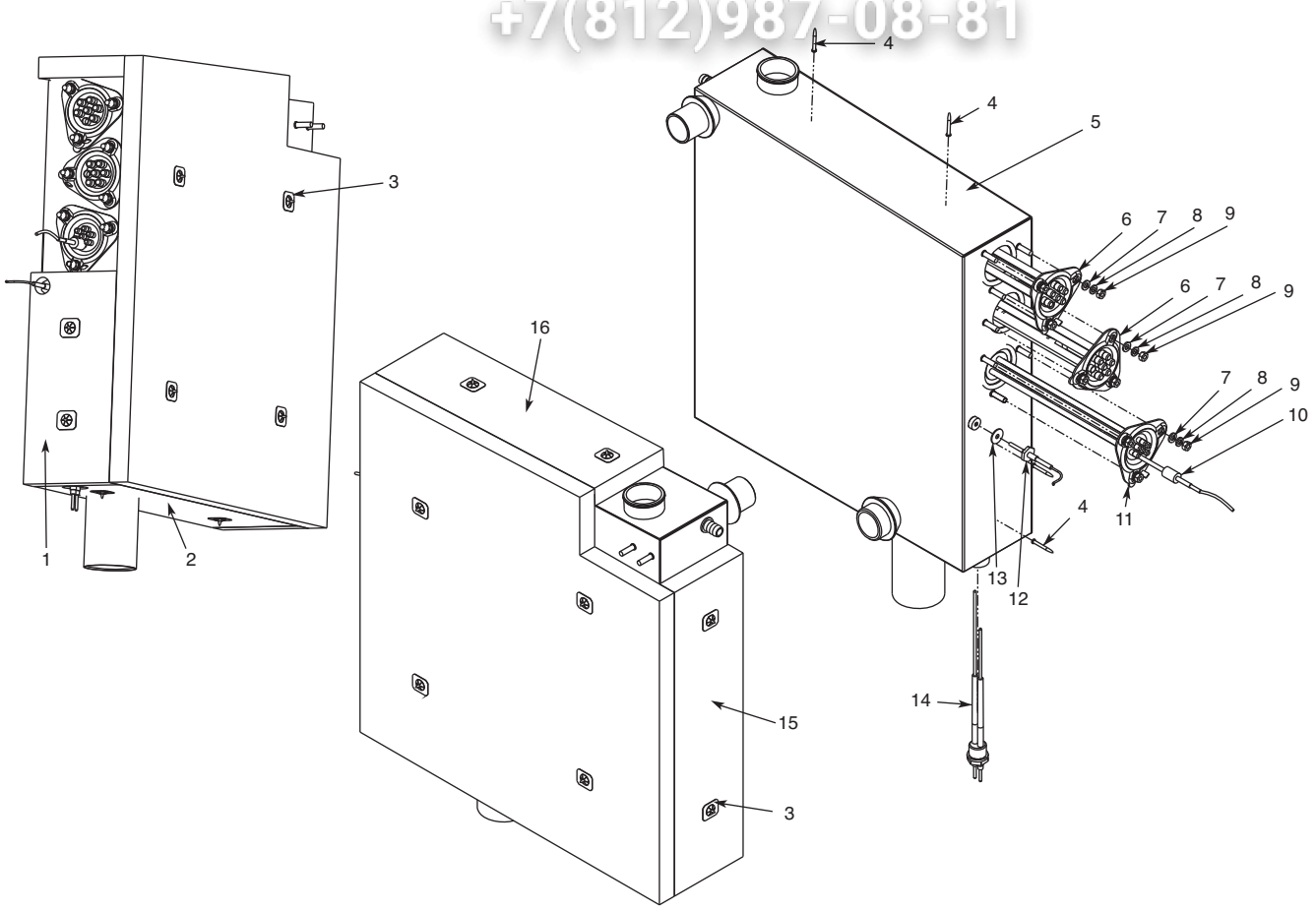

Item	Part	Description	Qty.
1	IN-27374	Insulation, Steam Gen, Heater Side	1
2	IN-27472	Insulation, Steam Gen, Top	1
3	CL-22259	Insulation Spike Clip	12
4	ST-22258	Insulation Spike	12
5	5004947	Generator Weld, 10.18	1
6	EL-33411	CT, Heater, ML, Combi Immersion, 9 kw, Flanged	2
7	WS-22297	Washer, Flat, M6 DIN 125	9
8	WS-22302	Washer, Lock, M6, DIN 127B	9
9	NU-22291	M6-1.0 x Hex S/S Nut 18-8	9
10	PR-33759	CT, ML, Combi, Temperature Sensor	1
11	EL-33412	CT, Heater, ML, Combi Immersion, 6 kw, Flanged	1
12	PR-33724	CT, ML Combi, Thermocouple, 1650 mm Wire Length	1
13	SA-25061	CT, T-Couple Probe, ML Combi	1
14	PR-3706	CT, Water Lev. Lg 3/4" NPT Fitting, 316 S/S Electr.	1
15	IN-27375	Insulation, Steam Gen	1
16	IN-27473	Insulation, Steam Gen, Bottom	1
*	IN-27373	Insulation, Steam Gen, Back	1
*	SA-23932	O-Ring, 14 mm x 2.5 mm Viton	3
*	PR-33759	Temperature Sensor CT	1

*Item Not Shown

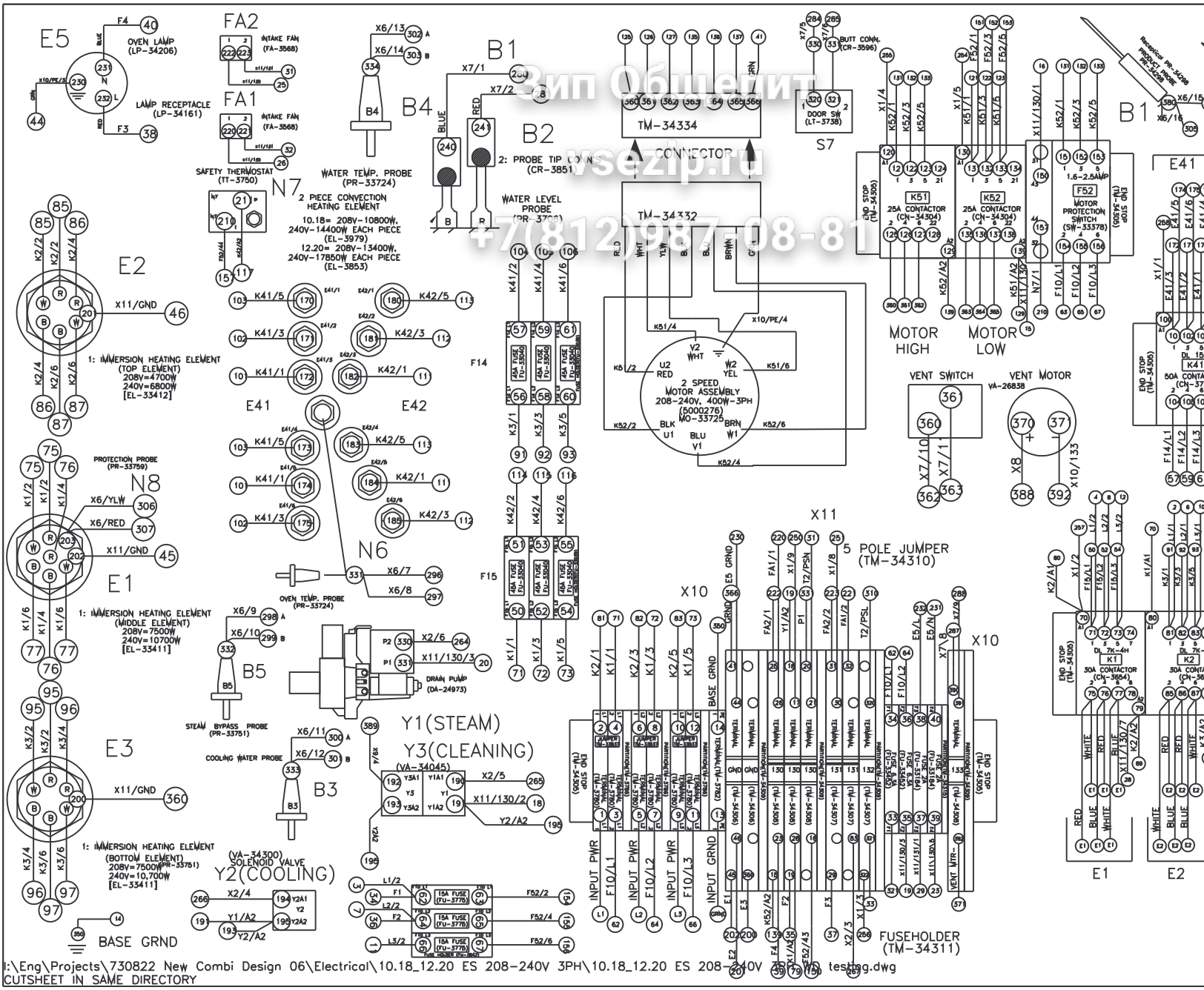

Вип Общепит
wsezip.ru
+7(812)987-08-81

I:\Eng\Projects\730822 New Combi Design 06\Electrical\10.18_12.20 ES 208-240V 3PH\10.18_12.20 ES 208-240V 3PH wd testing.dwg
CUTSHEET IN SAME DIRECTORY

Зип Общепит
vsezip.ru
+7(812)987-08-81

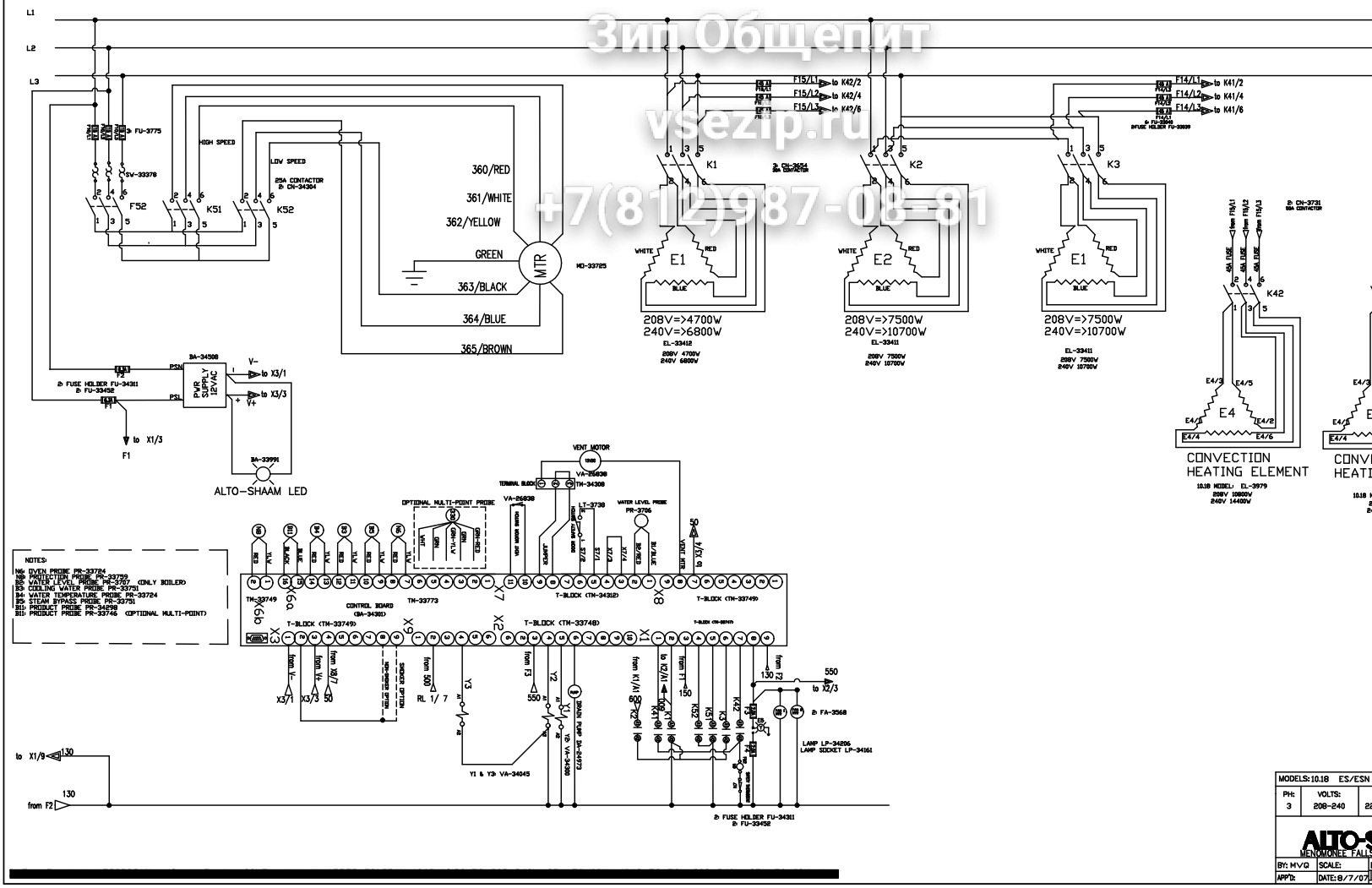

MODELS: 10.18 ES/ESN		
PH: 3	VOLTS: 208-240	22

ALTO-SHAAM
MENOMONEE FALLS

BY: MVG	SCALE:
APP'D:	DATE: 8/7/07

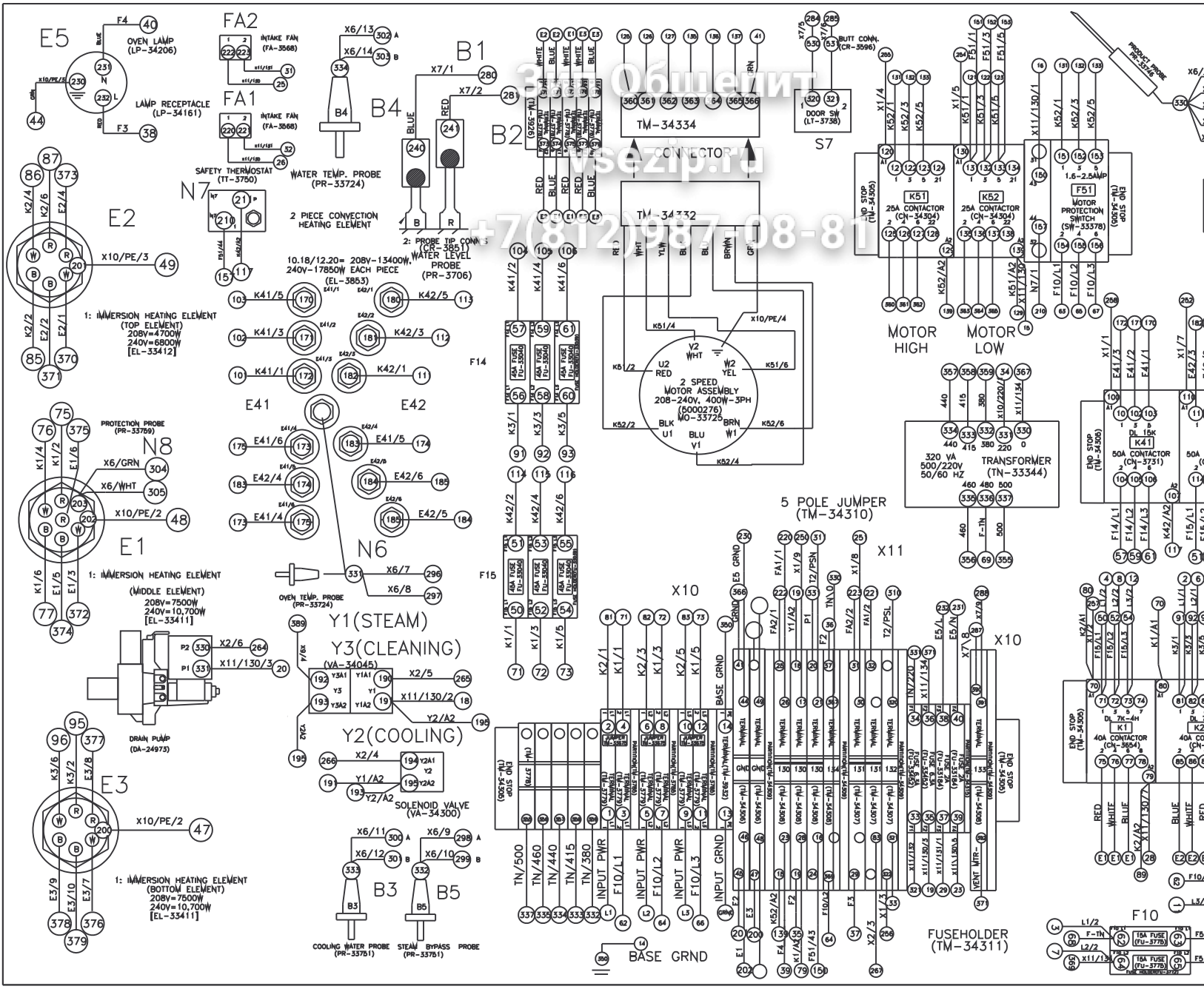
E5
OVEN LAMP (LP-34206)
LAMP RECEPTACLE (LP-34161)
FA2
INTAKE FAN (FA-3568)
FA1
INTAKE FAN (FA-3568)
SAFETY THERMOSTAT (TT-3750)
B4
WATER TEMP. PROBE (PR-33724)
B1
B2
2: PROBE TIP CONN. (CR-3851)
WATER LEVEL PROBE (PR-3706)
TM-34334
CONNECTOR
TM-34332
S7
DOOR SW (LT-3738)
BUTT CONN. (CR-3596)
N7
2 PIECE CONVECTION HEATING ELEMENT
E2
1: IMMERSION HEATING ELEMENT (TOP ELEMENT) 208V=4700W 240V=6800W [EL-33412]
10.18/12.20= 208V-1340OW, 240V-17850W EACH PIECE (EL-3853)
E41
E42
F14
2 SPEED MOTOR ASSEMBLY 208-240V, 400W-3PH (5000276) MO-33725
MOTOR HIGH
MOTOR LOW
K51 25A CONTACTOR (CN-34304)
K52 25A CONTACTOR (CN-34304)
F51 MOTOR PROTECTION SWITCH (SW-33378)
1.6-2.5AMP
TRANSFORMER (TN-33344)
320 VA 500/220V 50/60 HZ
K41 50A CONTACTOR (CN-3731)
N8
PROTECTION PROBE (PR-33759)
E1
1: IMMERSION HEATING ELEMENT (MIDDLE ELEMENT) 208V=7500W 240V=10,700W [EL-33411]
N6
OVEN TEMP. PROBE (PR-33724)
Y1(STEAM)
Y3(CLEANING) (VA-34045)
Y2(COOLING)
SOLENOID VALVE (VA-34300)
DRAIN PUMP (DA-24975)
E3
1: IMMERSION HEATING ELEMENT (BOTTOM ELEMENT) 208V=7500W 240V=10,700W [EL-33411]
B3
B5
COOLING WATER PROBE (PR-33751)
STEAM BYPASS PROBE (PR-33751)
5 POLE JUMPER (TM-34310)
X10
X11
FUSEHOLDER (TM-34311)
BASE GRND
F10
TN/500
TN/460
TN/440
TN/415
TN/380
INPUT PWR
INPUT GRND
VENT MTR-

Зип Общепит
vsezip.ru
+7(812)987-08-81

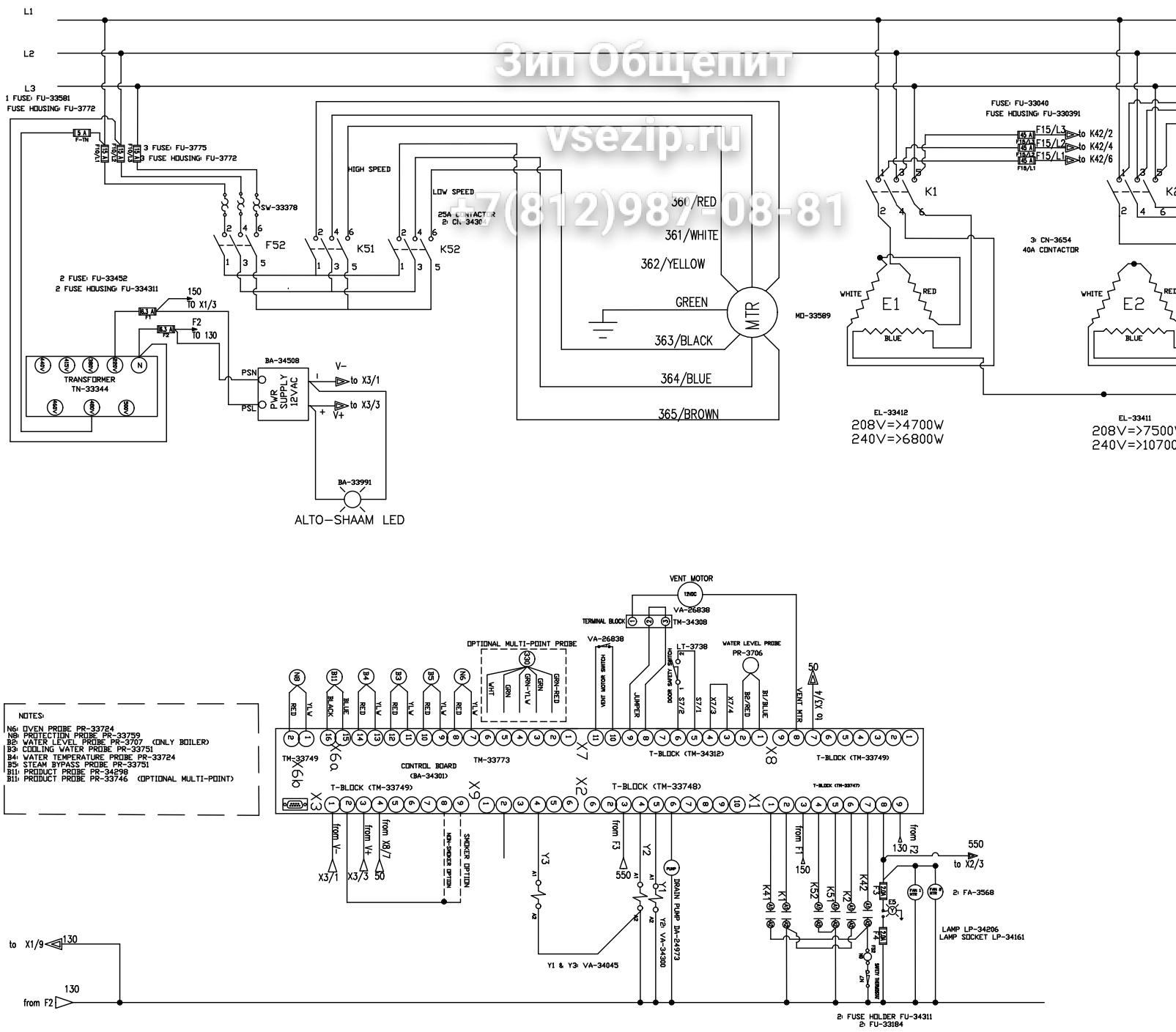

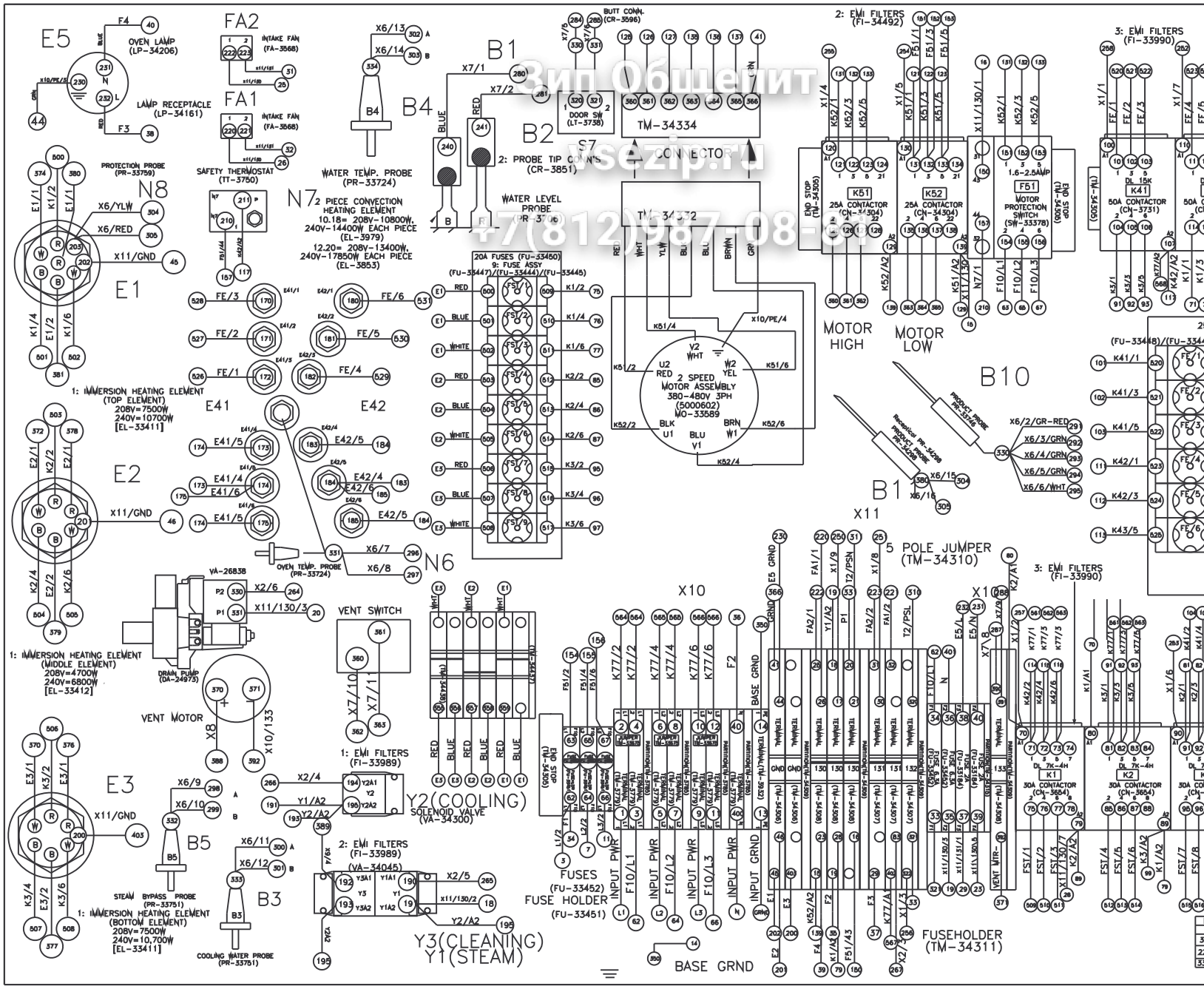
E5
OVEN LAMP (LP-34206)
LAMP RECEPTACLE (LP-34161)
FA2
INTAKE FAN (FA-3568)
FA1
INTAKE FAN (FA-3568)
SAFETY THERMOSTAT (TT-3750)
B4
WATER TEMP. PROBE (PR-33724)
B1
B2
2: PROBE TIP CONN'S (CR-3851)
WATER LEVEL PROBE (PR-33756)
S7
DOOR SW (LT-3738)
TM-34334 CONNECTOR
TM-34372
2: EMI FILTERS (FI-34492)
3: EMI FILTERS (FI-33990)
N8
PROTECTION PROBE (PR-33759)
E1
N7
2 PIECE CONVECTION HEATING ELEMENT
10.18= 208V-10800W, 240V-14400W EACH PIECE (EL-3979)
12.20= 208V-13400W, 240V-17850W EACH PIECE (EL-3853)
1: IMMERSION HEATING ELEMENT (TOP ELEMENT) 208V=7500W 240V=10700W [EL-33411]
E41
E42
20A FUSES (FU-33450) 9: FUSE ASSY (FU-33447)/(FU-33444)/(FU-33445)
2 SPEED MOTOR ASSEMBLY 380-480V 3PH (5000602) WO-33589
MOTOR HIGH
MOTOR LOW
B10
PRODUCT PROBE PR-33756
RECEPTACLE PR-34208
PRODUCT PROBE PR-34209
B1
E2
1: IMMERSION HEATING ELEMENT (MIDDLE ELEMENT) 208V=4700W 240V=6800W [EL-33412]
VA-26838
DRAIN PUMP (DA-34973)
OVEN TEMP. PROBE (PR-33724)
N6
VENT SWITCH
VENT MOTOR
X10
X11
5 POLE JUMPER (TM-34310)
E3
B5
STEAM BYPASS PROBE (PR-33751)
1: IMMERSION HEATING ELEMENT (BOTTOM ELEMENT) 208V=7500W 240V=10,700W [EL-33411]
B3
COOLING WATER PROBE (PR-33751)
2: EMI FILTERS (FI-33989)
(VA-34045)
Y2(COOLING)
SOLENOID VALVE (VA-34300)
Y3(CLEANING)
Y1(STEAM)
FUSES (FU-33452)
FUSE HOLDER (FU-33451)
BASE GRND
FUSEHOLDER (TM-34311)
K1 30A CONTACTOR (CN-3654)
K2 30A CONTACTOR (CN-3654)
K41 50A CONTACTOR (CN-3731)
K51 25A CONTACTOR (CN-34304)
K52 25A CONTACTOR (CN-34304)
F51 MOTOR PROTECTION SWITCH (SW-33378)

Зип Общепит
vsezip.ru
+7(812)987-08-81

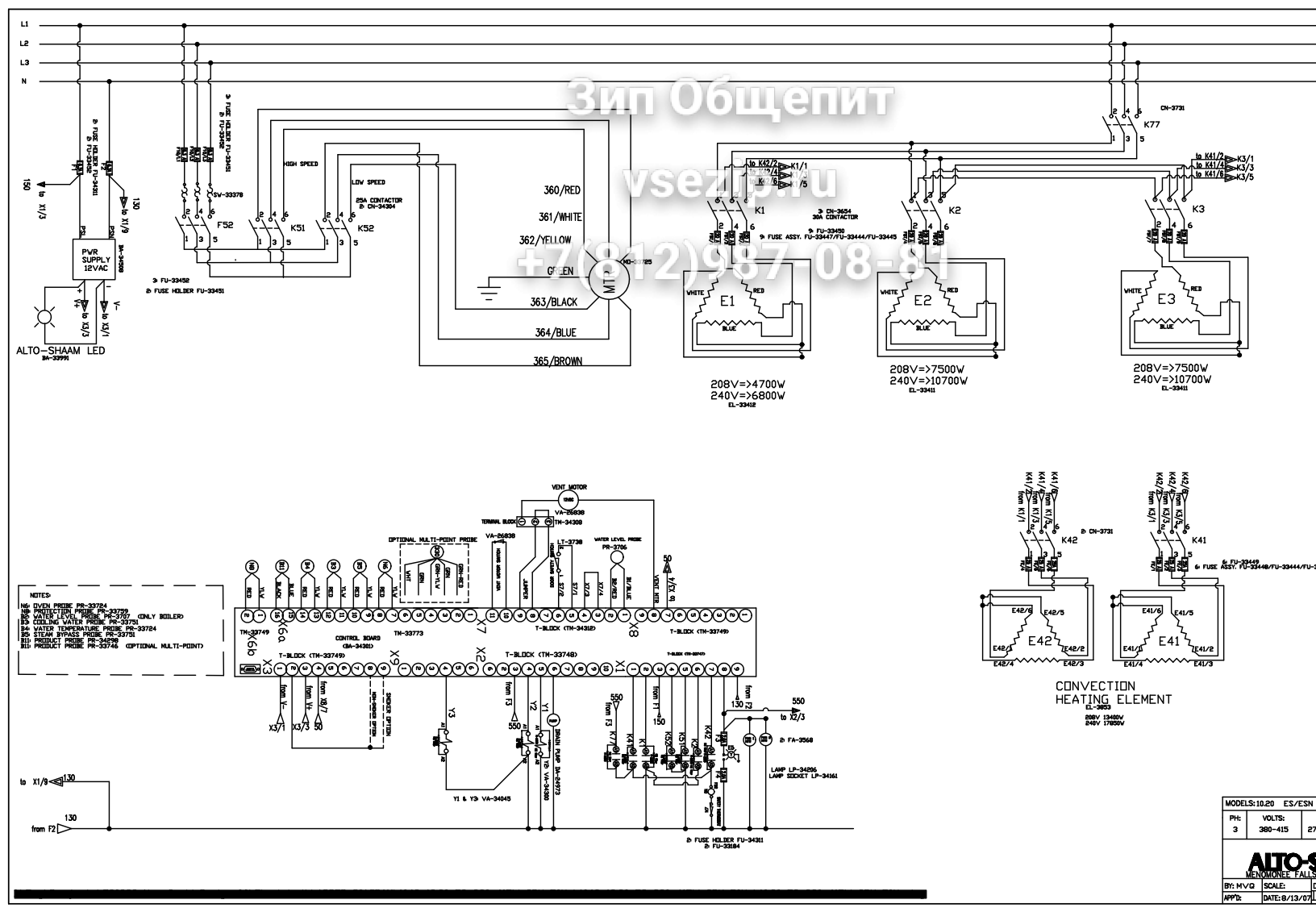

MODELS: 10.20 ES/ESN		
PH: 3	VOLTS: 380-415	27

ALTO-SHAAM
MENOMONEE FALLS

BY: MVQ	SCALE:	D
APP'D:	DATE: 8/13/07	

Зип Общепит
vsezip.ru
+7(812)987-08-81

SECTION CONTENTS

Technical Data 230

Parts Information 231
- Door Assembly 231
- Recessed Door Assembly 232
- Directional Panel Assembly 233
- Pressure Box Assembly 234

Wiring and Ladder Diagrams 235
- 208-240V 3PH 50/60 Hz Wiring 235
- 208-240V 3PH 50/60 Hz Ladder 236
- 440-480V 3PH 50/60 Hz Wiring 237
- 440-480V 3PH 50/60 Hz Ladder 238
- 380-415V 3PH 50 Hz Wiring 239
- 380-415V 3PH 50 Hz Ladder 240

Return to Main Table of Contents 3

Зип Общепит
vsezip.ru
+7(812)987-08-81

ALTO SHAAM COMBITHERM

10•18Esi SPECIFICATIONS

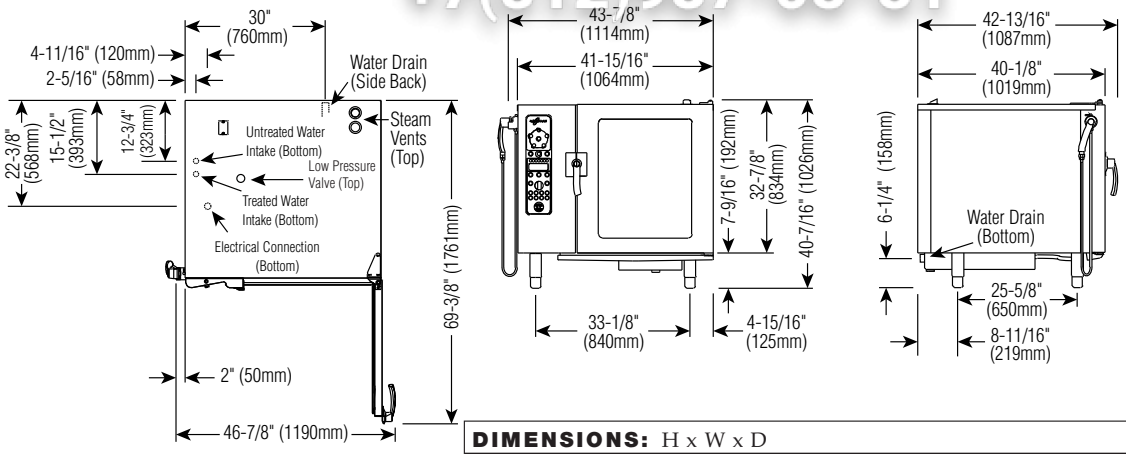

INSTALLATION REQUIREMENTS

Oven must be installed level.
Hood installation is required.
Water supply shut-off valve and back-flow preventer.

DIMENSIONS: H x W x D

EXTERIOR:
40-7/16" x 43-7/8" x 42-13/16" (1026mm x 1114mm x 1087mm)

EXTERIOR WITH RETRACTABLE DOOR:
40-7/16" x 47-7/8" x 42-13/16" (1026mm x 1216mm x 1087mm)

INTERIOR:
30-3/4" x 23-1/2" x 28-7/16" (781mm x 596mm x 722mm)

WATER REQUIREMENTS

TWO (2) COLD WATER INLETS - DRINKING QUALITY

ONE (1) TREATED WATER INLET:	3/4" NPT*	
ONE (1) UNTREATED WATER INLET:	3/4" NPT*	
LINE PRESSURE:	30 to 90 psi	2.8 to 6.2 bar

WATER DRAIN: 1-1/2" CONNECTION WITH AIR GAP

* Can manifold off of one 3/4" line.

CLEARANCE REQUIREMENTS

LEFT: 6" (152mm) **PLUS SERVICE ACCESS: 18" (457mm) RECOMMENDED**
20" (508mm) **FROM HEAT PRODUCING EQUIPMENT**

RIGHT: 4" (102mm) TOP: 20" (508mm) FOR AIR MOVEMENT

BACK: 4" (102mm) BOTTOM: 5-1/8" (130mm) FOR LEGS

COUNTER-TOP INSTALLATIONS MUST MAINTAIN 4" (102mm) MINIMUM CLEARANCE FROM COUNTER SURFACE.

WATER QUALITY MINIMUM STANDARDS

USING A WATER SUPPLY NOT MEETING ALTO-SHAAM'S MINIMUM WATER QUALITY STANDARDS WILL VOID THIS WARRANTY. It is the responsibility of the purchaser to ensure that incoming water supply is compliant with the specifications listed through adequate treatment measures. Installation of the CombiGuard™ Water Filtration System is recommended, but this system may not address all water quality issues present.

Contaminant	Inlet Water Requirements (untreated water)
Free Chlorine	Less than 0.1 ppm (mg/L)
Hardness	Less than 3 gpg (52 ppm)
Chloride	Less than 30 ppm (mg/L)
pH	7.0 to 8.5
Alkalinity	Less than 50 ppm (mg/L)
Silica	Less than 12 ppm (mg/L)
Total Dissolved Solids (tds)	Less than 60 ppm

ELECTRICAL

	VOLTAGE	PHASE	CYCLE/HZ	AWG	10•18Esi AMPS	10•18Esi kW	10•18Esi/sk AMPS	10•18Esi/sk kW
208-240	at 208	3	50/60	3 Wire plus ground	61.1/ph	22.0	62.5/ph	22.5
	at 240			AWG 2	70.3/ph	29.2	71.5/ph	29.7
380-415	at 380	3	50/60	4 Wire plus ground	33.5/ph	22.0	34.2/ph	22.5
	at 415			AWG 8	40.7/ph	29.2	41.4/ph	29.7
440-480	at 440	3*	50/60	3 Wire plus ground	35.7/ph	27.2	36.4/ph	27.7
	at 480			AWG 8	43.5/ph	36.1	44.0/ph	36.6

* ELECTRICAL SERVICE CHARGE APPLIES

WEIGHT

NET	520 lb	(236 kg)
SHIP	640 lb	(290 kg)
CRATE	46" x 51" x 46" EST.	
DIMENSIONS:	(1168 x 1295 x 1168mm)	

CAPACITY

	10•18Esi	10•18Esi/sk
FULL-SIZE PANS: 20" x 12" x 2-1/2"	Twenty (20)	Eighteen (18)
GN 1/1: 530 x 325 x 65mm	Twenty (20)	Eighteen (18)
GN 2/1: 650 x 530 x 65mm	Ten (10)	Eight (8)
FULL-SIZE SHEET PANS:* 18" x 26" x 1" ON WIRE SHELVES ONLY	Ten (10)	Nine (9)

240 lb (109 kg) MAXIMUM

VOLUME MAXIMUM: 150 QUARTS (190 LITERS)

*ADDITIONAL WIRE SHELVES REQUIRED FOR MAXIMUM CAPACITY

ELECTRIC COMBITHERM — INSTALLATION MANUAL #7001

ЗипРазбор
vsezip.ru
+7(812)987-08-81

DOOR ASSEMBLY

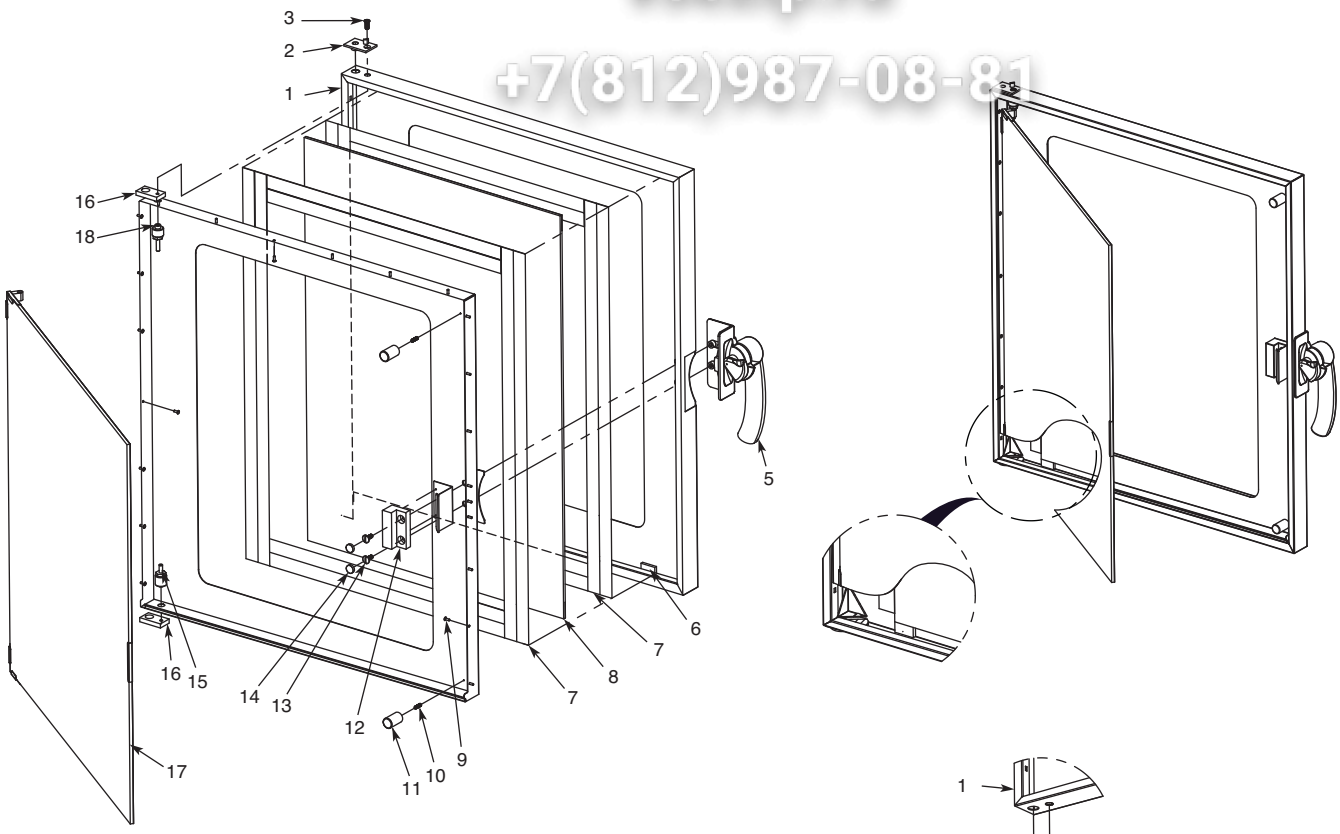

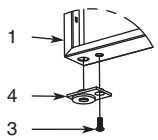

Hinge Detail

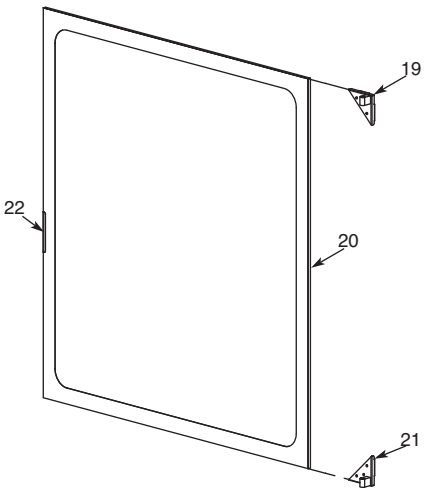

Item	Part	Description	Qty.
1	1006880	Outer Panel, Door 10.10	1
2	HG-25077	Hinge, CT, Top Stop, ML Combi	1
3	SC-22282	Screw, CT, 1.0 x 16 mm, Ph Oval, Hd N/S 18-8, DIN #966A	2
4	HG-25079	Hinge, CT, Upper Ratchet, Combi	1
5	HD-26966	Handle, Door, Right, Combi '06	1
6	BM-27116	Bumper	2
7	TA-25125	Tape, Double Sided	2
8	GL-27224	Glass, Outer Door, 10.10/10.18ep	1
9	RI-27108	Rivet, Sealed	22
10	SC-25091	Screw, CT, M5 x 16, DIN 551, A2 S/S, Sltd Set Screw Flat Pt	2
11	BM-27146	Bumper Stop/Inner Door	2
12	SP-27212	Spacer, Window Latch	1
13	SC-27125	Screw, Truss Head, S/S	2
14	PG-24789	Plug, 15 mm	2
15	PI-26974	Pin, Lower	1
16	HG-25078	Hinge, CT, Anchor, ML Combis	2
17	5005560	Inner Door Glass Assembly	1
18	PI-26973	Pin, Upper	1
19	HG-27217	Lower Hinge Assembly	1
20	GL-27225	Glass, Inner	1
21	HG-27218	Upper Hinge Assembly	1
22	LT-25394	Latch, CT, ML, 7.1 ML	1

Зип Общепит

RECESSED DOOR ASSEMBLY

vsezip.ru
+7(812)987-08-81

(Contact factory.)

ЗипОбщепит
vsezip.ru
+7(812)987-08-81

DIRECTIONAL PANEL ASSEMBLY

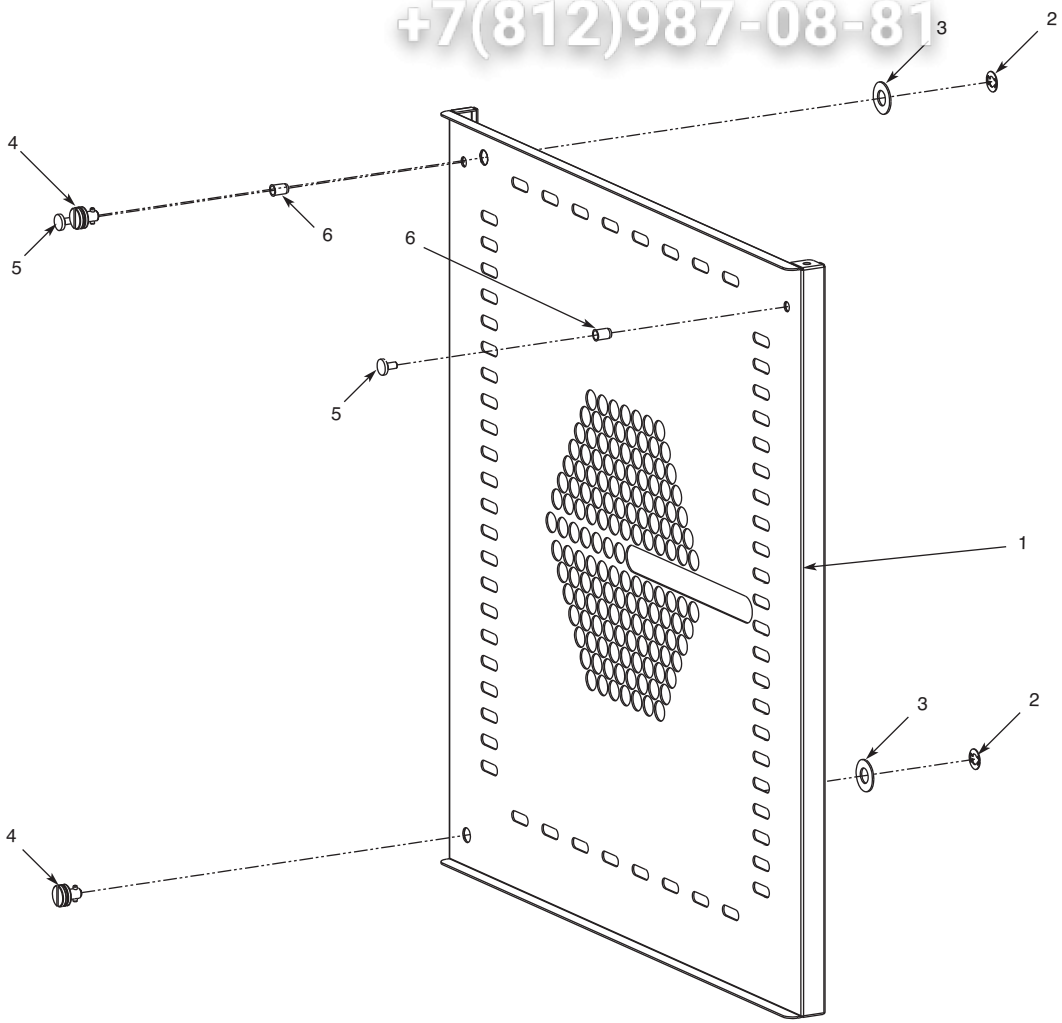

Item	Part	Description	Qty.
1	1006166	Directional Panel, 10.18 IEP	1
2	WS-24090	Holding (Lock Clip)	2
3	1006601	Directional Panel Spacer, 16 GA	2
4	CL-24089	Clip, CT, ML, Lock, W/3 Washers	2
5	SC-22753	Screw, SS Round, Hanging Rack	2
6	NU-22770	Nut, Threaded Insert, M6	2

ЗипОбщепит
vsezip.ru
+7(812)987-08-81

PRESSURE BOX ASSEMBLY

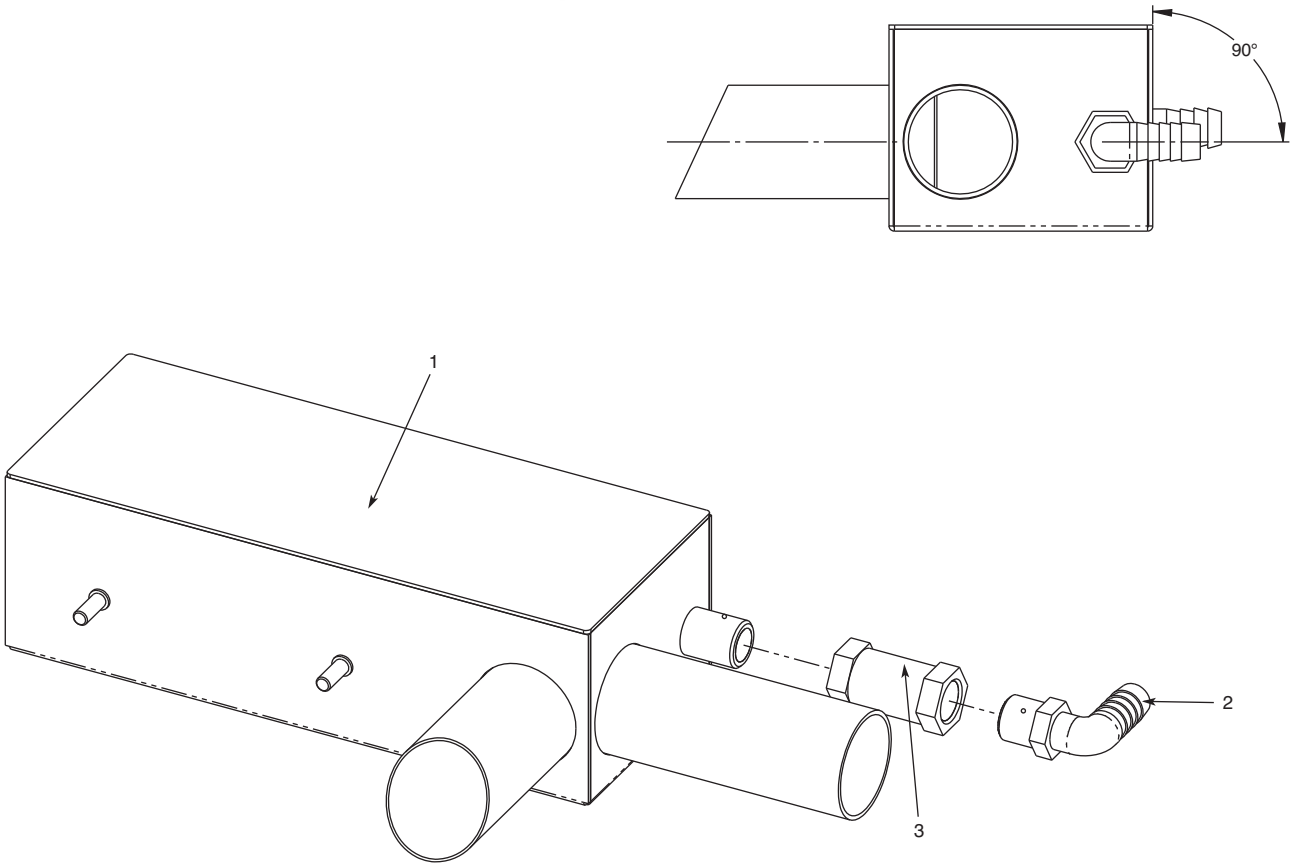

Item	Part	Description	Qty.
1	5005009	Pressure Box	1
2	EB-25551	Elbow, Nylon, 1/2" x 3/8"	1
3	VA-25549	Valve, 3/8", Flow Control, 0.12 GPM	1

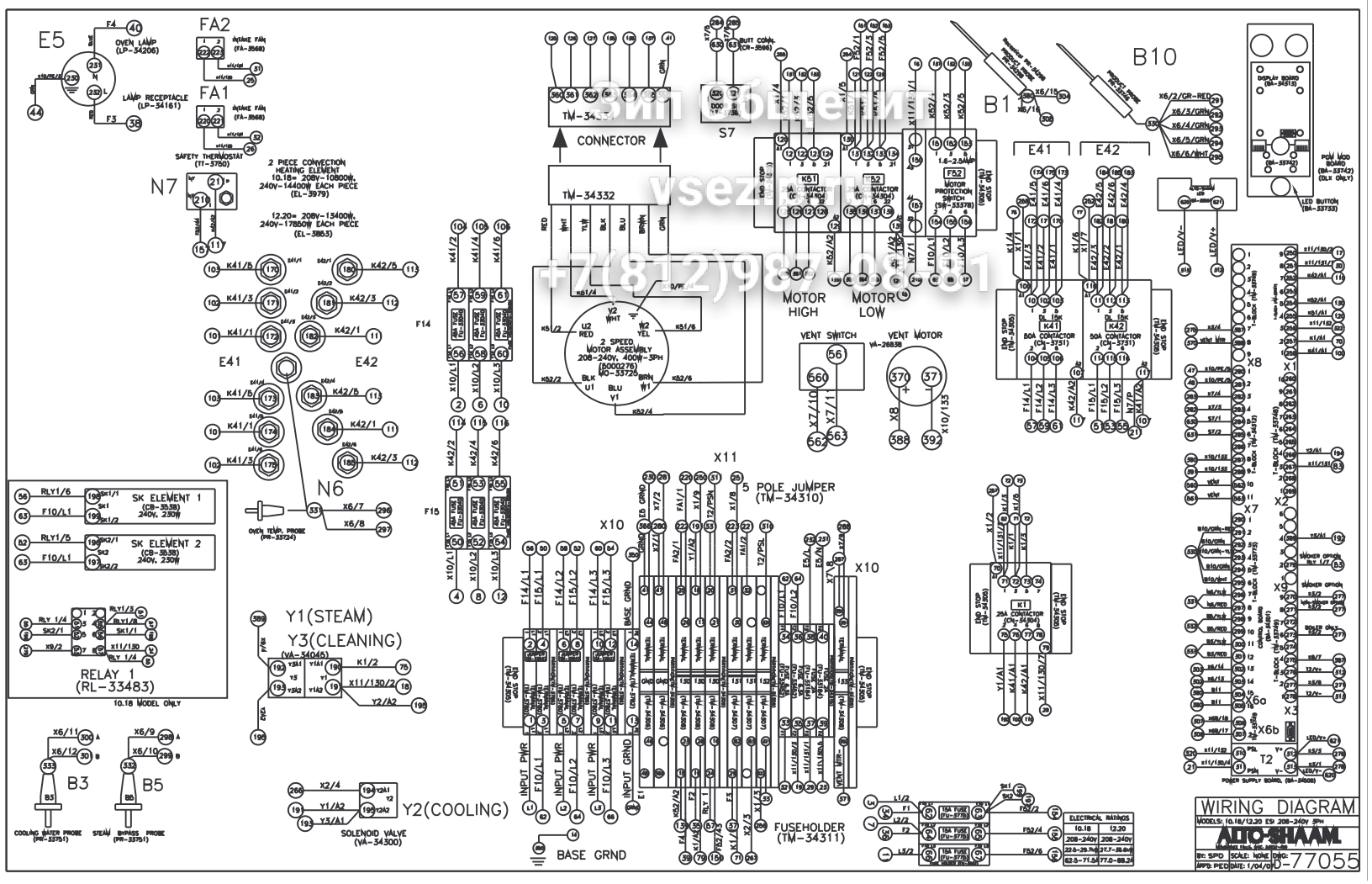
E5
OVEN LAMP (LP-34206)
LAMP RECEPTACLE (LP-34161)
FA2
FA1
SAFETY THERMOSTAT (TT-3750)
N7
2 PIECE CONVECTION HEATING ELEMENT 10.18= 208V-1080OW, 240V-1440OW EACH PIECE (EL-3979)
12.20= 208V-1340OW, 240V-1785OW EACH PIECE (EL-3885)
E41
E42
N6
OVEN TEMP. PROBE (PR-33724)
SK ELEMENT 1 (CR-35381) 240V, 2300W
SK ELEMENT 2 (CR-35381) 240V, 2500W
RELAY 1 (RL-33483)
10.18 MODEL ONLY
B3
B5
COOLING WATER PROBE (PR-33751)
STEAM BYPASS PROBE (PR-33751)
Y1(STEAM)
Y3(CLEANING)
(VA-34045)
Y2(COOLING)
SOLENOID VALVE (VA-34300)
CONNECTOR
TM-34332
S7
MOTOR HIGH
MOTOR LOW
2 SPEED MOTOR ASSEMBLY 208-240V, 400W-3PH (8000276) (MO-33720)
VENT SWITCH
VENT MOTOR (VA-26838)
X11
5 POLE JUMPER (TM-34310)
X10
FUSEHOLDER (TM-34311)
BASE GRND
B1
B10
E41
E42
K41
K42
K51
K52
F52
MOTOR PROTECTION SWITCH (SW-33378)
50A CONTACTOR (CR-33731)
20A CONTACTOR (CR-34304)
K1
DISPLAY BOARD (BA-35151)
PCM MOD BOARD (BA-33742) (DLX ONLY)
LED BUTTON (BA-33732)
POWER SUPPLY BOARD, (BA-34008)
ELECTRICAL RATINGS
10.18
12.20
208-240V
WIRING DIAGRAM
MODELS: 10.18/12.20 ESI 208-240V 3PH
ADCO-SHAAM
BY: SPD
SCALE: NONE
DWG:
APP'D: PED
DATE: 1/04/0
5-77055

Зип Общепит
vsezip.ru
+7(812)987-08-81

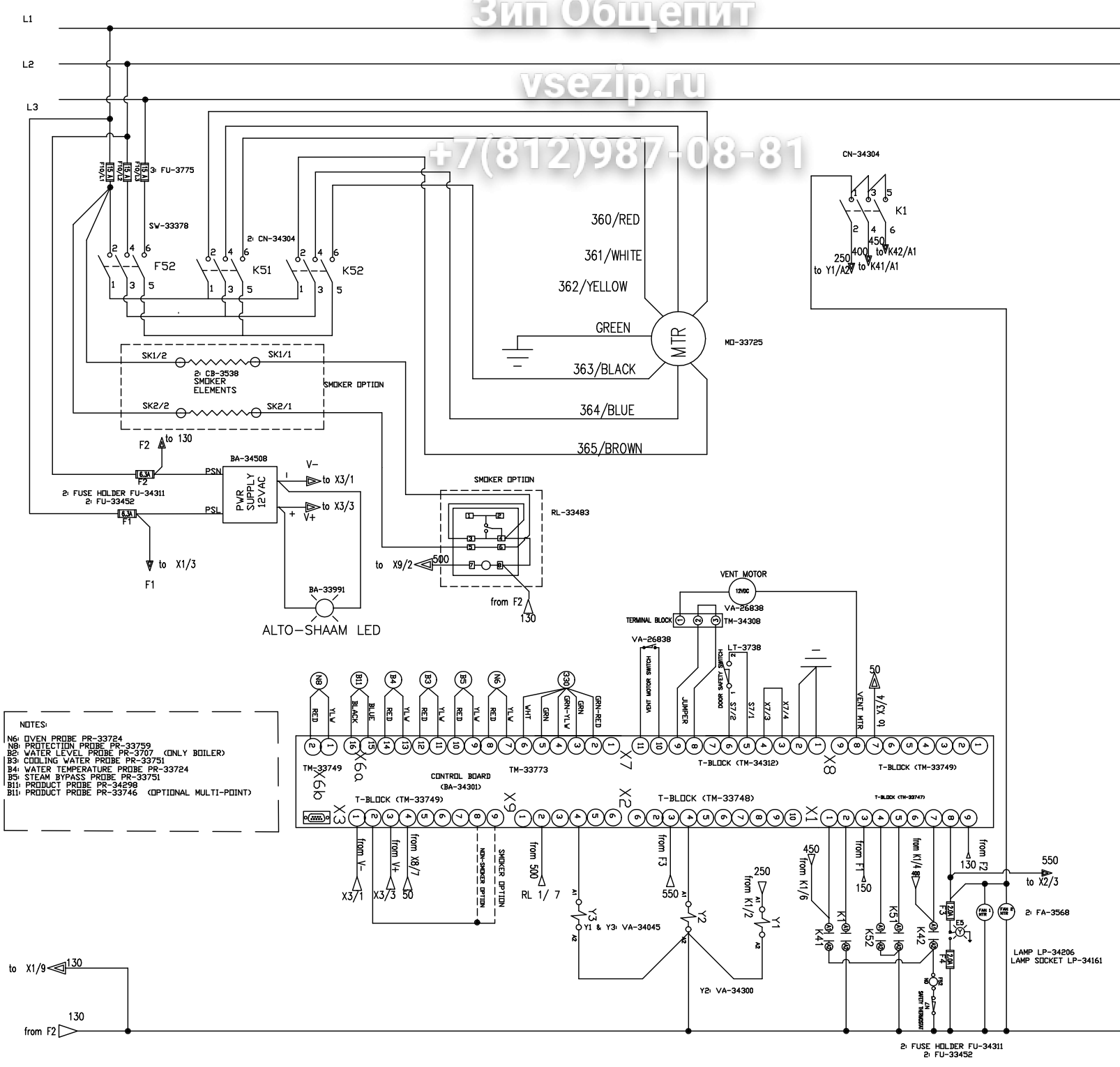

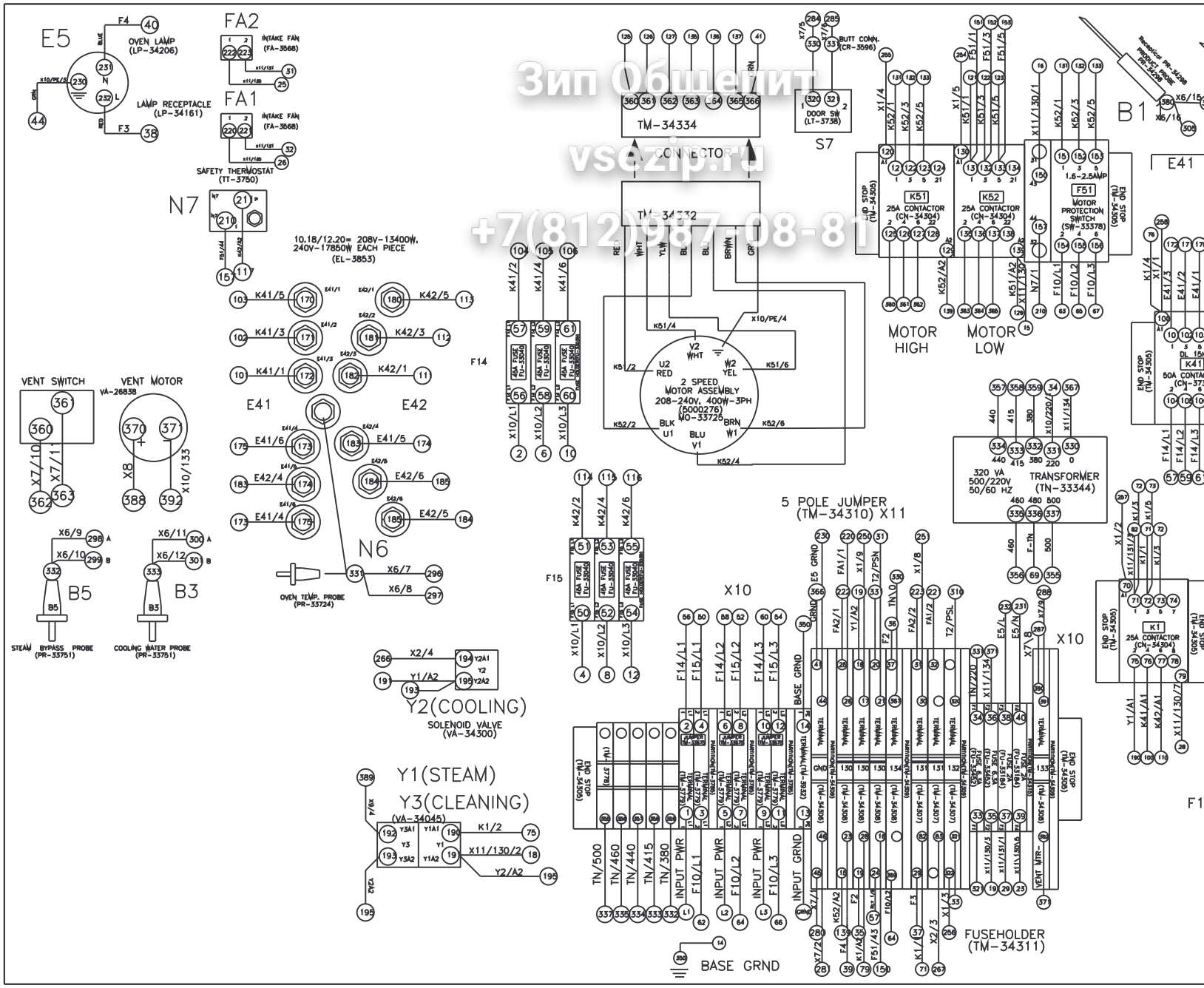

Зип Общепит
vsezip.ru
+7(812)987-08-81

Зип Общепит
vsezip.ru
+7(812)987-08-81

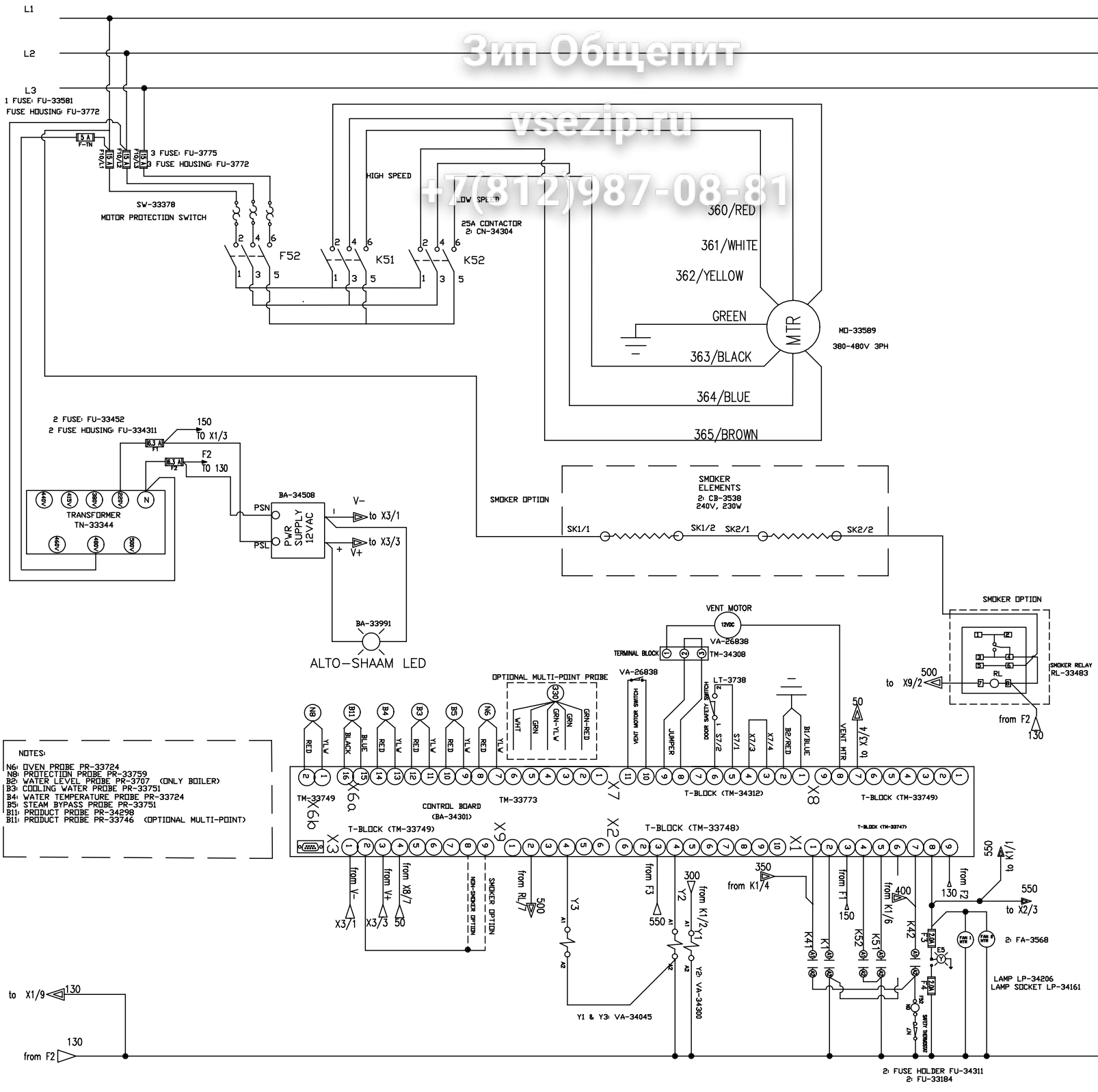

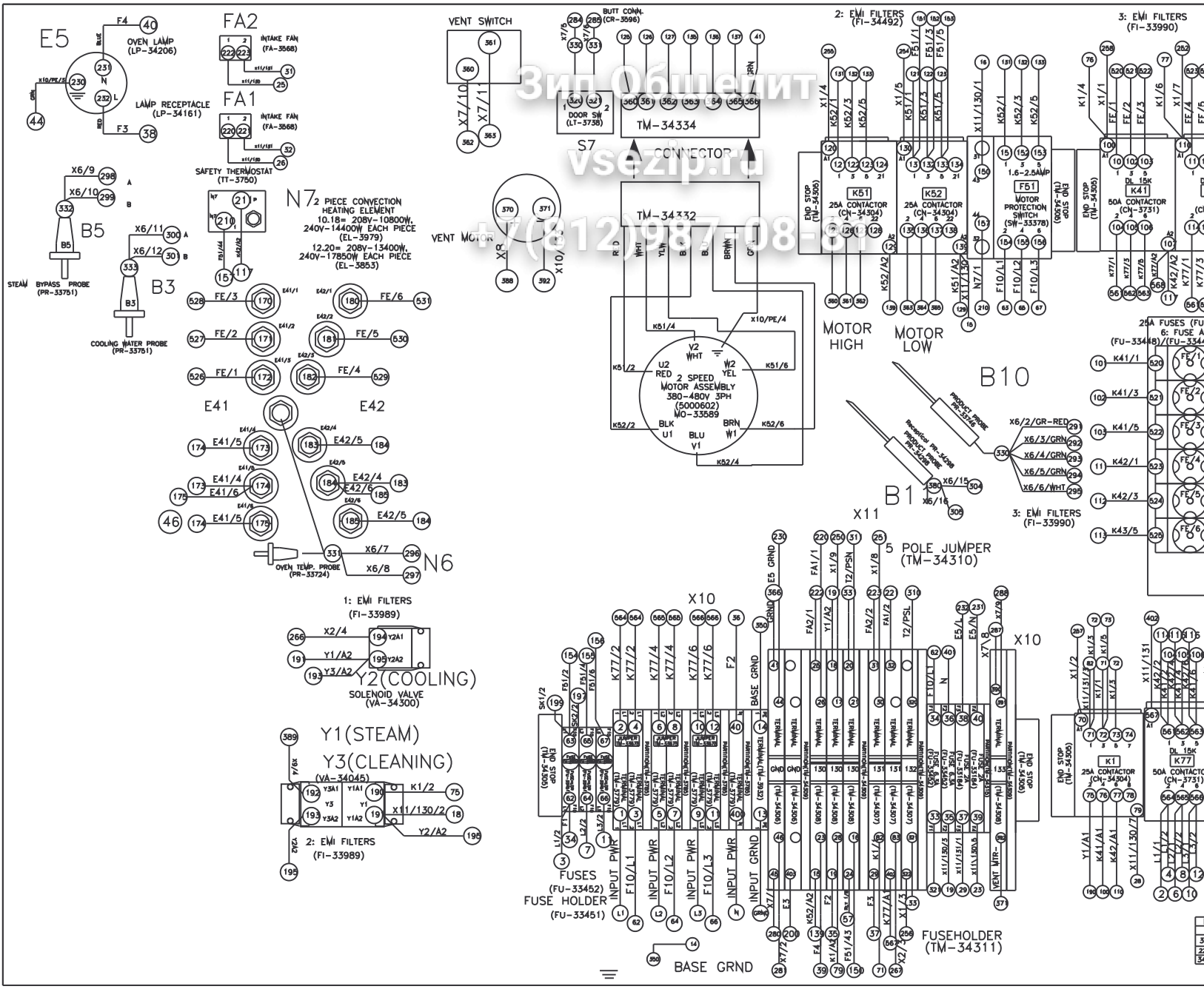

Зип Общепит
vsezip.ru
+7(812)987-08-81

Зип Общепит
vsezip.ru
+7(812)987-08-81

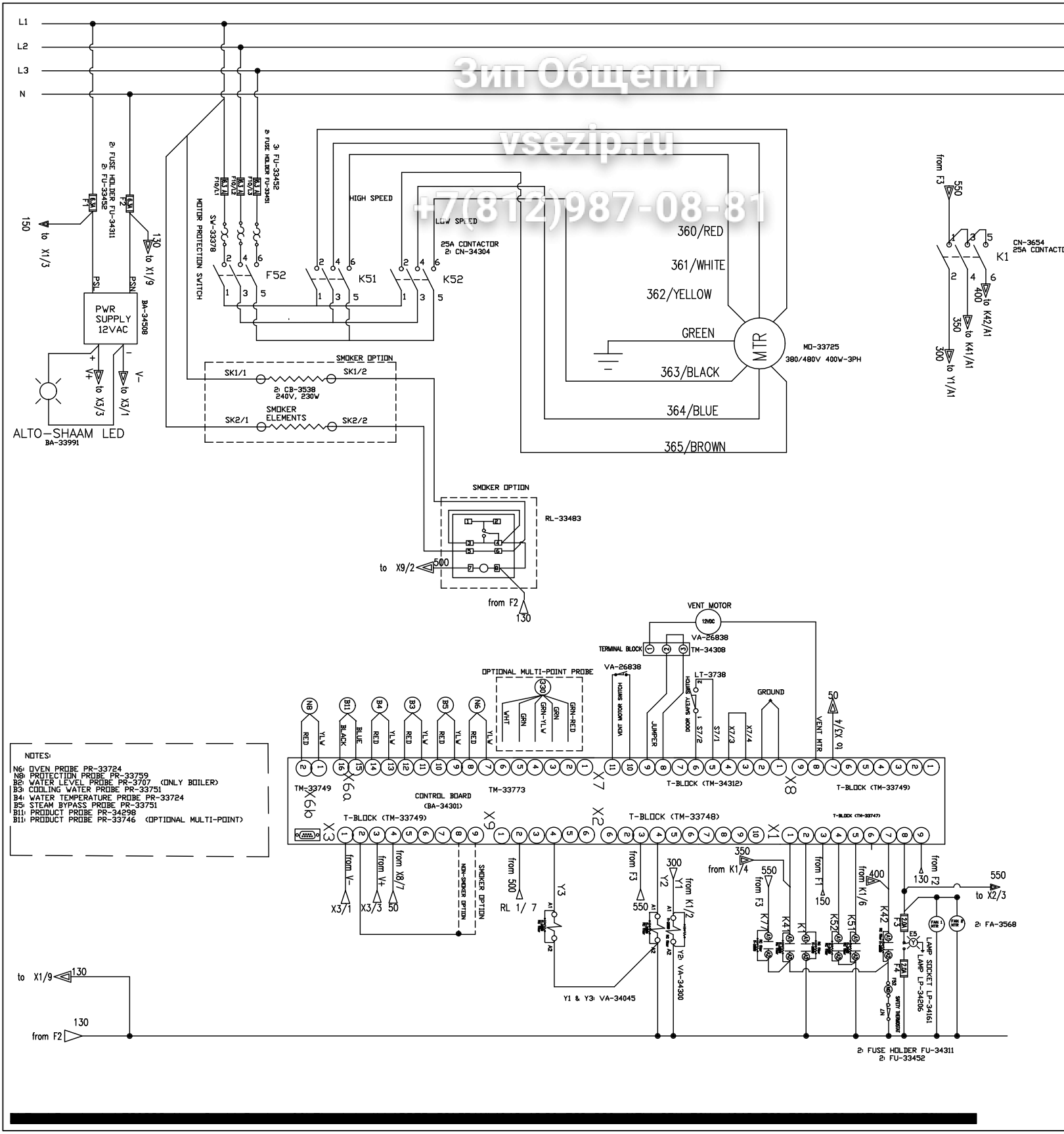

Зип Общепит

vsezip.ru

+7(812)987-08-81

ALTO SHAAM®

W164 N9221 Water Street • P.O. Box 450 • Menomonee Falls, Wisconsin 53052-0450 • U.S.A.
PHONE: (262)251-3800 (800)558-8744 U.S.A./CANADA • FAX: (262)251-7067 (800)329-8744 U.S.A. • www.alto-shaam.com

PRINTED IN U.S.A.

PRICE: U.S.

08/08