MOD: XB403G

EXPLODED VIEW
DISEGNO ESPLOSO

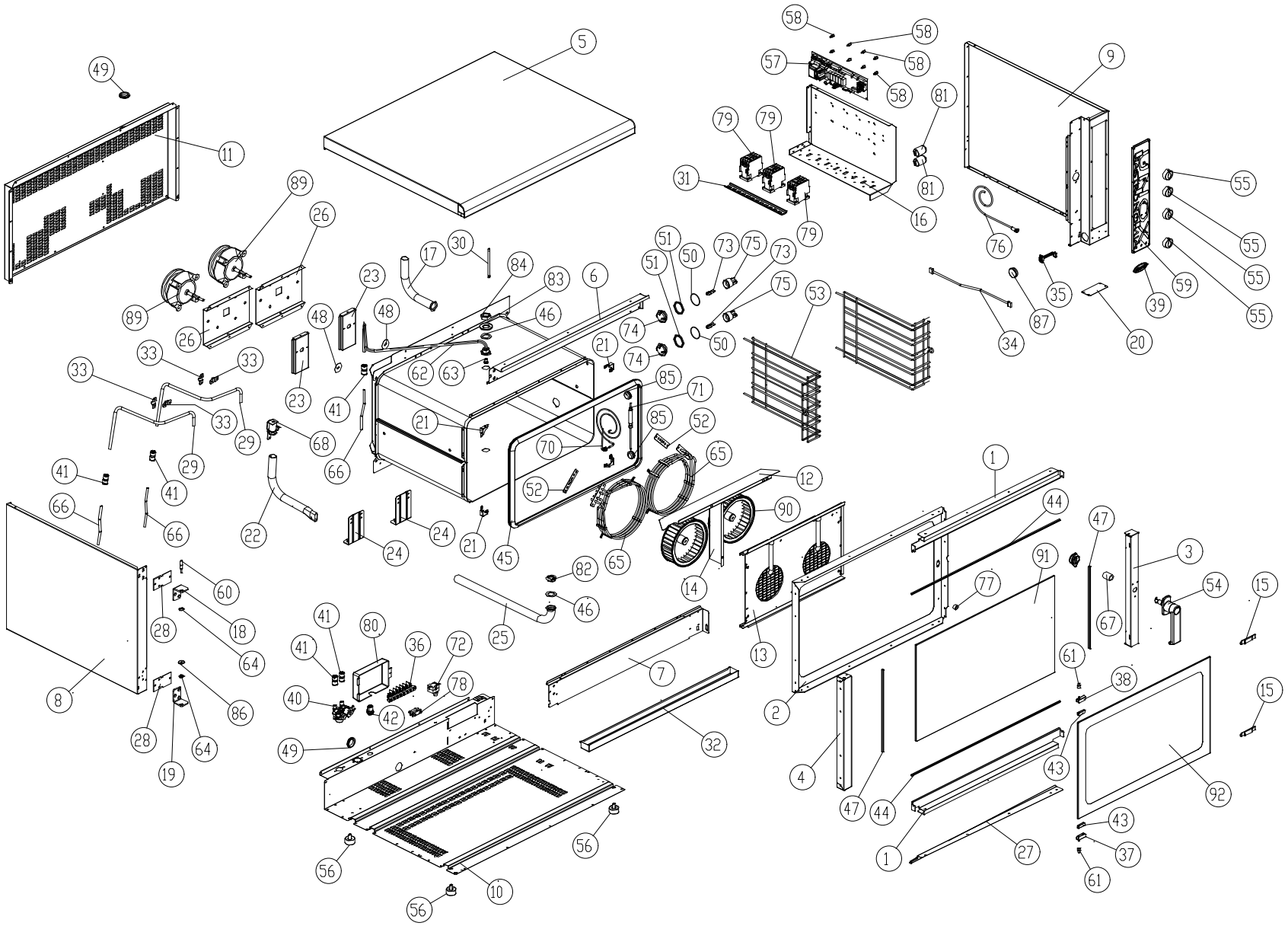

LEGEND - LEGENDA

1	0B1010A1	**56**	PD061A
2	0B1030A1	**57**	PE1010B1
3	0B1035A1	**58**	PE102
4	0B1040A0	**59**	PE1050B0
5	0D1000B0	**60**	RC1035A0
6	0D1010A2	**61**	RC1000B0
7	0D1011A1	**62**	RC1135A0
8	0D1020B0	**63**	RC1145A0
9	0D1021B0	**64**	RC540
10	0E1000C1	**65**	RS1040A0
11	0F1010C0	**66**	TB008
12	0G1005B1	**67**	TB1005A0
13	0G1015A4	**68**	VE1135A0
14	0G1055B0	**70**	TR1005A2
15	2H032	**71**	TR1000A3
16	0H1005D0	**72**	TR255B
17	0H1015A0	**73**	VE1005A1
18	0H1020A0	**74**	VE1010A0
19	0H1021A0	**75**	VE1015A0
20	0H1030A2	**76**	VE1020A0
21	0H1040A0	**77**	VE1030A1
22	0H1050A1	**78**	VE1075A0
23	0H1060A0	**79**	VE1095A0
24	0H1065A0	**80**	VE1100A0
25	0H1070A0	**81**	VE221
26	0H1095A0	**82**	VI1030A2
27	0H1100A3	**83**	VI1235A0
28	0H1140A2	**84**	VI1245A0
29	0H1500A0	**85**	VI1515A1
30	0H1650A0	**86**	VI524
31	0H1850A0	**87**	VM1005A0
32	0M1000A2	**89**	VN1000B0
33	2H070	**90**	VN1025A0
34	CE1000C0	**91**	VT1010A0
35	CE1005B0	**92**	VT1012A0
36	CE212		
37	CR045		
38	CR046		
39	ED1070A0		
40	EL1160A0		
41	EL1055A0		
42	EL1125A0		
43	GN006A		
44	GN100		
45	GN1000B0		
46	GN1010A0		
47	GN102		
48	GN1140A0		
49	GN1045A0		
50	GN1055A0		
51	GN1065A0		
52	GN224		
53	GR1015A1		
54	MG1000A0		
55	MN121A		

MOD: XB403G

EXPLODED VIEW
DISEGNO ESPLOSO

DESCRIZIONE CODICI

1	0B1010A1	LISTELLO SUP/INF PORTA INOX SERIE XB
2	0B1030A1	PORTA INTERNA INOX XB403
3	0B1035A1	COLONNINA LATERALE DX INOX XB403 XV203/303
4	0B1040A0	COLONNINA LATERALE SX INOX XB403 XV203/303
5	0D1000B0	COPERCHIO INOX SERIE XB
6	0D1010A2	PROFILO SUP.INOX FACCIATA MUFFOLA XB803
7	0D1011A1	PROFILO INF. INOX FACCIATA MUFFOLA XB803
8	0D1020B0	FIANCO SX INOX XB403
9	0D1021B0	FIANCO DX INOX XB403
10	0E1000C1	FONDO ESTERNO INOX XB403/G/603/G
11	0F1010C0	SCHIENA INOX XB403
12	0G1005B1	DIST. CARTER ARIA INOX STAND SERIE XB
13	0G1015A4	CARTER ARIA INOX XSE312
14	0G1055B0	DIV. VERT. CARTER ARIA INOX XB403/G
15	2H032	LAMIERA FERMA PORTA FREDDA LAVATO
16	0H1005D0	LAMIERA PORTACOMPONENTI
17	0H1015A0	CAMINO FUMI INOX STANDARD
18	0H1020A0	STAFFA SUP. SUPPORTO PORTA
19	0H1021A0	STAFFA INFERIORE SUPP. PORTA
20	0H1030A2	TAPPO INF. CHIUSURA CRUSCOTTI
21	0H1040A0	ANGOLO INOX FACCIATA MUFFOLA STAND
22	0H1050A1	TUBO VENTURI STANDARD
23	0H1060A0	NUOVO SUPPORTO PREMISTOPPA ZINCATO
24	0H1065A0	NUOVO SOSTEGNO MUFFOLA STANDARD
25	0H1070A0	TUBO SCARICO INOX ø30x1.5
26	0H1095A0	PROFILO SOSTEGNO MOTORI XB403 XV203G
27	0H1100A3	PROF. SALVA GOCCIA INOX SERIE XB
28	0H1140A2	CONTROSTAFFA PORTA XB-XG-XV
29	0H1500A0	TUBO EST.UMIDITA' NUOVA LINEA STAND
30	0H1650A0	TUBO COPRI BULBO TERMOSTATO DI SIC
31	0H1850A0	BARRA 2MT OMEGA PORTA
32	0M1000A2	CASSETTO RACCOGLI GOCCE
33	2H070	PROFILO FERMA TUBO UMIDITA' LAVATO
34	CE1000C0	CAVO COLL. SCHEDA POT-CONTR 4 FILI VERS. 2003 UL CSA CON
35	CE1005B0	CAVO COLLEG. SCHEDA-CONNETT.DB9F RS232 VERS. 2003
36	CE212	MORSETT. SFK/7FTW GV V0 00160593
37	CR045	CERN.DX INOX XV-XL-XB
38	CR046	CERN.SX INOX XV-XL-XB
39	ED1070A0	ETICHETTA UNOX ELLISSE 78x33 ARGENTO CON BORDO EST.
40	EL1160A0	ELETTR DOPPIA ATT. J.GUEST INCORPORATO CON RID.ROSSO TA
41	EL1055A0	RIDUZIONE J.G. DA D=10 A D=8 PM201008E
42	EL1125A0	PASSAPARETE Ø8
43	GN006A	GUARN.PORTA FREDDA A BAND. PTFE CAR/CARB Sp=1mm
44	GN100	PROFILO PORTA SIL NERO P346 XT
45	GN1000B0	GUARNIZIONE NERA 50 SHORE FORNI XB-XG-XV
46	GN1010A0	GUAR.PTFE+CARB NUOVO SCARICO ø42x28,5x2
47	GN102	PROFILO PORTA SIL NERO C121 XT
48	GN1140A0	GUARNIZIONE PORTAMOTORE STAMP. ALBERO MOT. D10 XB-X
49	GN1045A0	GUARN.ANTIVIBR. CAMINO-SCARICO øi31-øe39,9-Sp=7,5
50	GN1055A0	OR 46x2 VMQ 70 ROSSO
51	GN1065A0	GUAR.(FE01)PTFE VERGINEø53x44x4 PORTALAMP.
52	GN224	GUARN.PTFE+CARB 100x22x0,8sp-c/fori 1999
53	GR1015A1	GRIGLIA LAT. DX/SX INOX GASTR. XB 5TG
54	MG1000A0	NUOVA MANIGLIA STANDARD
55	MN121A	MANOPOLA CON INDICE NON SERIGRAFATO '04
56	PD061A	PIEDINO M10 D=35 H=20 NERO OPACO
57	PE1010B1	SCHEDA DI POTENZA LINEA PROFESSIONAL VER. 2003.NET
58	PE102	SUPPORTO PER SCHEDA 24POT98
59	PE1050B0	CONTROLLO VERTICALE COMPLETO GASTRONOMIA VER. 2003
60	RC1035A0	PERNO FILETTATO SUP.PORTA XB-XV-XG
61	RC1000B0	BOCCOLA INOX SUPP. VETRO STANDAR
62	RC1135A0	RACC.PORTA GIRANTE CON TUBO 0H1775A0 SALDATO
63	RC1145A0	VITE CHIUSURA FORO PORTA GIRANTE
64	RC540	BOCCOLA BRONZO STAFFE SUPP. PORTA XV501
65	RS1040A0	RES.CIRCOLARE 3200+1050W 230V D=230 Z.F. INCOLOY
66	TB008	TUBO PE 7,93x4,75 TRASPARENTE
67	TB1005A0	TUBO SIL. NERO 27x17 55/65 Sh
68	VE1135A0	ATTUATORE VENTURI 220V 50/60 Hz SERIE 2
70	TR1005A2	SONDA DI TEMP. CON PASSAPARETE DOPPIA SALD AISI316L
71	TR1000A3	SONDA AL CUORE MANICO LISCIO
72	TR255B	TERMOSTATO SIC.+UNIPOL.330°C Ty95H L=1300mm
73	VE1005A1	LAMPADA ALOGENA 40W
74	VE1010A0	VETRO PORTALAMPADA VAPORE 2002
75	VE1015A0	PORTA LAMPADA PER LAMPADA ALOGENA
76	VE1020A0	MICROINTERRUTTORE PORTA MAGNETICO
77	VE1030A1	CALAMITA D=22,9mm PER MICROPORTA
78	VE1075A0	PRESSACAVO FV 268 RO
79	VE1095A0	TELERUTTORE GE 25A 230V 50/60 Hz CL01A400T6
80	VE1100A0	SCATOLA COPRI MORSETTIERA SERIE PLUS
81	VE221	CONDENS.ICAR PRL 5uF 450V FASTON
82	VI1030A2	TAPPO FRESATO PER NUOVO SCARICO
83	VI1235A0	RONDELLA PIANA 50x28x4 INOX
84	VI1245A0	DADO 3/4" H=10 INOX FISSAGGIO PORTA GIRANTE
85	VI1515A1	SUPPORTO SONDA AL CUORE CON CAVA PER FILO INOX
86	VI524	RONDELLA 6x24x2 INOX
87	VM1005A0	COPRITESTA ROTONDO ABS NERO 40x2
89	VN1000B0	MOTORE COND.5uF 200W ALB.M8 CONN.5 POLI
90	VN1025A0	VENTOLE Ø196 H61 38 PALE DADO M8
91	VT1010A0	VETRO INT.764x436x6 TFL XB403-G
92	VT1012A0	VETRO EST.SER.GRIGIO 730x435x4 BETFL XB403G

DESCRIPTION

1	0B1010A1	ENG-LISTELLO SUP/INF PORTA INOX SERIE XB
2	0B1030A1	ENG-PORTA INTERNA INOX XB403
3	0B1035A1	STAINLESS STEEL DOOR RIGHT LATERAL COLUMN XB403 XV203/
4	0B1040A0	STAINLESS STEEL DOOR LEFT LATERAL COLUMN XB403 XV203/30
5	0D1000B0	STAINLESS STEEL COVER SERIE XB
6	0D1010A2	
7	0D1011A1	ENG-PROFILO INF. INOX FACCIATA MUFFOLA XB803
8	0D1020B0	
9	0D1021B0	
10	0E1000C1	
11	0F1010C0	
12	0G1005B1	
13	0G1015A4	
14	0G1055B0	
15	2H032	WASHED METAL HOLDER FOR COOL DOOR
16	0H1005D0	COMPONENT STAINLESS STEEL HOLDER
17	0H1015A0	STANDARD STAINLESS STEEL FUME CHIMNEY
18	0H1020A0	UPPER BRACKET TO HOLD THE DOOR
19	0H1021A0	LOWER BRACKET TO HOLD THE DOOR
20	0H1030A2	BOTTOM LID TO CLOSE CONTROL PANEL
21	0H1040A0	STAINLESS STEEL STANDARD CORNER OF FRONT PART OF CAVITY
22	0H1050A1	STANDARD VENTURI TUBE
23	0H1060A0	NEW ZINCED SUPPORT TO PUSH MOTORS
24	0H1065A0	NEW STANDARD CAVITY SUPPORT
25	0H1070A0	ENG-TUBO SCARICO INOX ø30x1.5
26	0H1095A0	PROFILE TO HOLD MOTORS XB403 XV203G
27	0H1100A3	
28	0H1140A2	DOOR COUNTERSTIRRUP XB-XG-XV
29	0H1500A0	EXTERNAL HUMIDITY TUBE NEW LINE STAND
30	0H1650A0	ENG-TUBO COPRI BULBO TERMOSTATO DI SIC
31	0H1850A0	
32	0M1000A2	DRIP TRAY
33	2H070	WASHED PROFILE TO HOLD HUMIDITY TUBE
34	CE1000C0	CONNECTION CABLE POWER - CONTROL CARD 4 WIRES VERS. 20
35	CE1005B0	CONNECTION CABLE CONTROL-CONNETT.DB9F RS 232 VERS. 20
36	CE212	TERMINAL BOARD
37	CR045	RIGHT STAINLESS STEEL HINGE XV-XL-XB
38	CR046	LEFT STAINLESS STEEL HINGE XV-XL-XB
39	ED1070A0	UNOX ELLIPTICAL STICKER 78x33-SILVER WITH EXTERNAL FRAME
40	EL1160A0	WATER DOUBLE ELECTROVALVE + J.G. CONN. INCL. W/ RED CAL.
41	EL1055A0	J.G. REDUCTION FROM D=10 TO D=8 PM201008E
42	EL1125A0	WALL PASSING SEAL Ø8
43	GN006A	COLD DOOR SEAL PTFE CAR/CARB Thickness=1mm
44	GN100	DOOR BLACK SEAL P346 XT
45	GN1000B0	BLACK DOOR SEAL 50 SHORE OVENS XB-XG-XV
46	GN1010A0	SEAL PTFE+CARB NEW DRAIN ø42x28,5x2
47	GN102	BLACK SILICON DOOR PROFILE C121 XT
48	GN1140A0	MOTOR GASKET
49	GN1045A0	ANTIVIBR.SEAL FOR EXHAUST CHIMNEY øi31-øe39,9-Sp=7,5
50	GN1055A0	OR 46x2 VMQ 70 RED
51	GN1065A0	SEAL FOR LAMP GLASS COVER (FE01) VIRGIN PTFE ø53x44x4
52	GN224	PTFE+CARB 100x22x0,8sp-c/fori 1999 GASKET
53	GR1015A1	STAINLESS STEEL RIGHT/LEFT SIDE SUPPORT GASTRONOMY XB 5T
54	MG1000A0	NEW STANDARD HANDLE
55	MN121A	KNOB WITH NON SERIGRAPHIED INDEX '04
56	PD061A	SMALL FOOT M10 D=35 H=20 BLACK OPAQUE
57	PE1010B1	PROFESSIONAL POWER CARD VER. 2003.NET
58	PE102	SUPPORT FOR CARD 24POT98
59	PE1050B0	COMPLETE VERTICAL CHEFLUX CONTROL VER. 2003
60	RC1035A0	ENG-PERNO FILETTATO SUP.PORTA XB-XV-XG
61	RC1000B0	ENG-BOCCOLA INOX SUPP. VETRO STANDAR
62	RC1135A0	WATER-SOAP DISTRIBUTION SYSTEM SUPPORT WITH WELDED TU
63	RC1145A0	
64	RC540	BRONZE BUSHING FOR STIRRUP TO HOLD DOOR XV501
65	RS1040A0	CIRC.HEAT. ELEMENT 3200+1050W 230V D=230 COLD AREA INC
66	TB008	TRANSPARENT TUBE PE 7,93x4,75
67	TB1005A0	BLACK SILICONE PIPE 27x17 55/65 Sh
68	VE1135A0	
70	TR1005A2	TEMPERATE PROBE WITH WALL PASSING NUT-DOUBLE WELDING
71	TR1000A3	CORE TEMPERATURE CONTROL PROBE WITH SMOOTH HANDLE
72	TR255B	SAFETY THERMOSTAT+UNIPOL. 330°C Ty95H L=1300mm
73	VE1005A1	HALOGEN LAMP 40W
74	VE1010A0	LIGHT BULB GLASS COVER (STEAM) 2002
75	VE1015A0	LAMP HOLDER FOR HALOGEN LAMP
76	VE1020A0	MAGNETIC DOOR MICROSWITCH
77	VE1030A1	MAGNET FOR DOOR MICROSWITCH D=22,9mm
78	VE1075A0	ENG-PRESSACAVO FV 268 RO
79	VE1095A0	REMOTE CONTROL SWITCH GE 25A 230V 50/60 Hz CL01A400T6
80	VE1100A0	
81	VE221	ICAR CONDENSER PRL 5uF 450V FASTON
82	VI1030A2	MILLED LID FOR NEW DRAIN PIPE
83	VI1235A0	
84	VI1245A0	
85	VI1515A1	
86	VI524	STAINLESS STEEL WASHER 6x24x2
87	VM1005A0	ROUND HEAD COVER BLACK ABS 40x2
89	VN1000B0	MOTOR COND.5uF 200W ALB.M8 CONN.5 TERMINALS
90	VN1025A0	BLADE FAN Ø196x61 39 BLADES AISI316L 8/10
91	VT1010A0	INTERNAL GLASS 764x436x6 TFL XB403-G
92	VT1012A0	EXTERNAL GREY SER.GLASS 730x435x4 BETFL XB403G